ULVAC

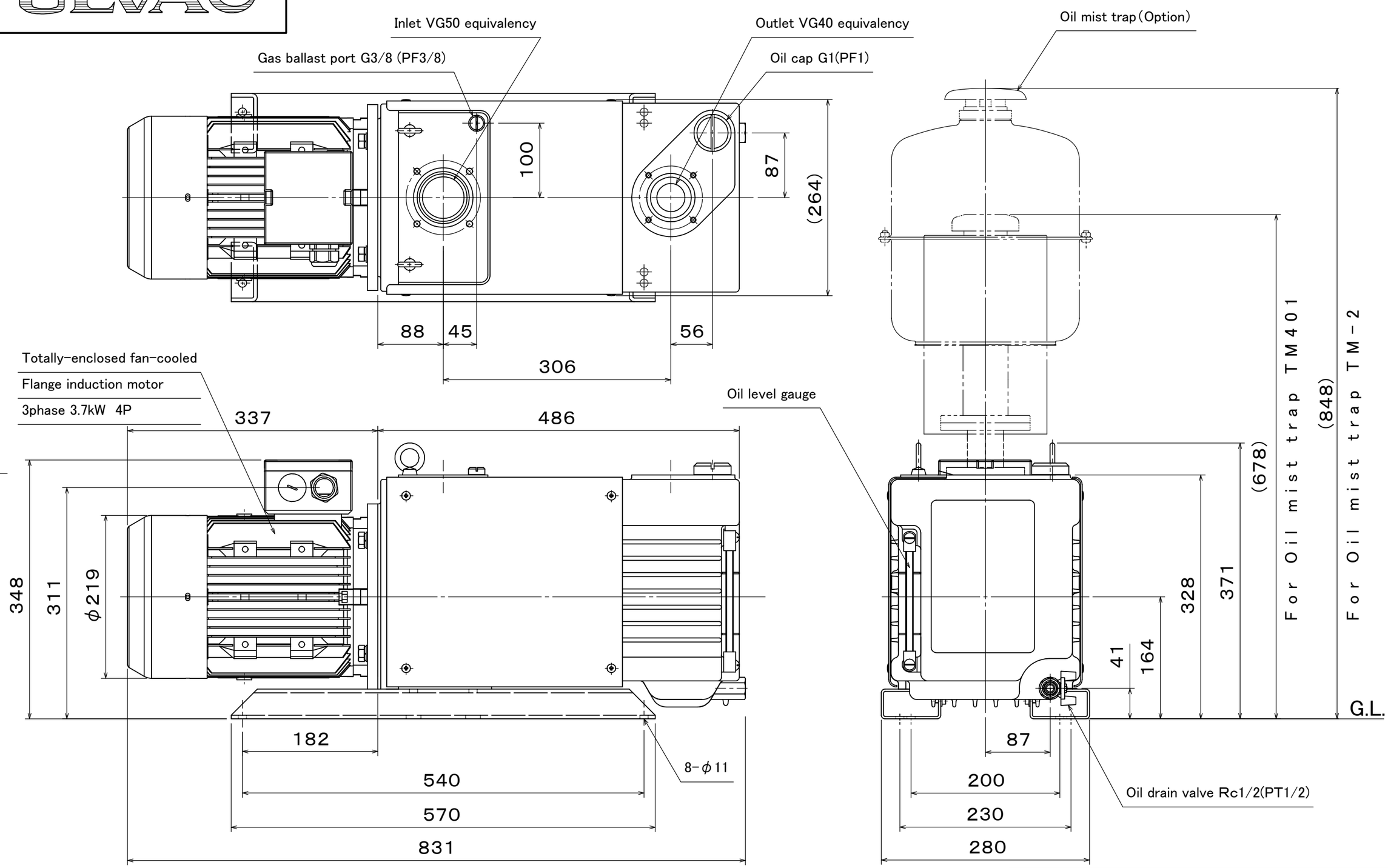

TITLE	VD90C Appearance Drawing
DWG No.	KA9219-012-02A