ULVAC

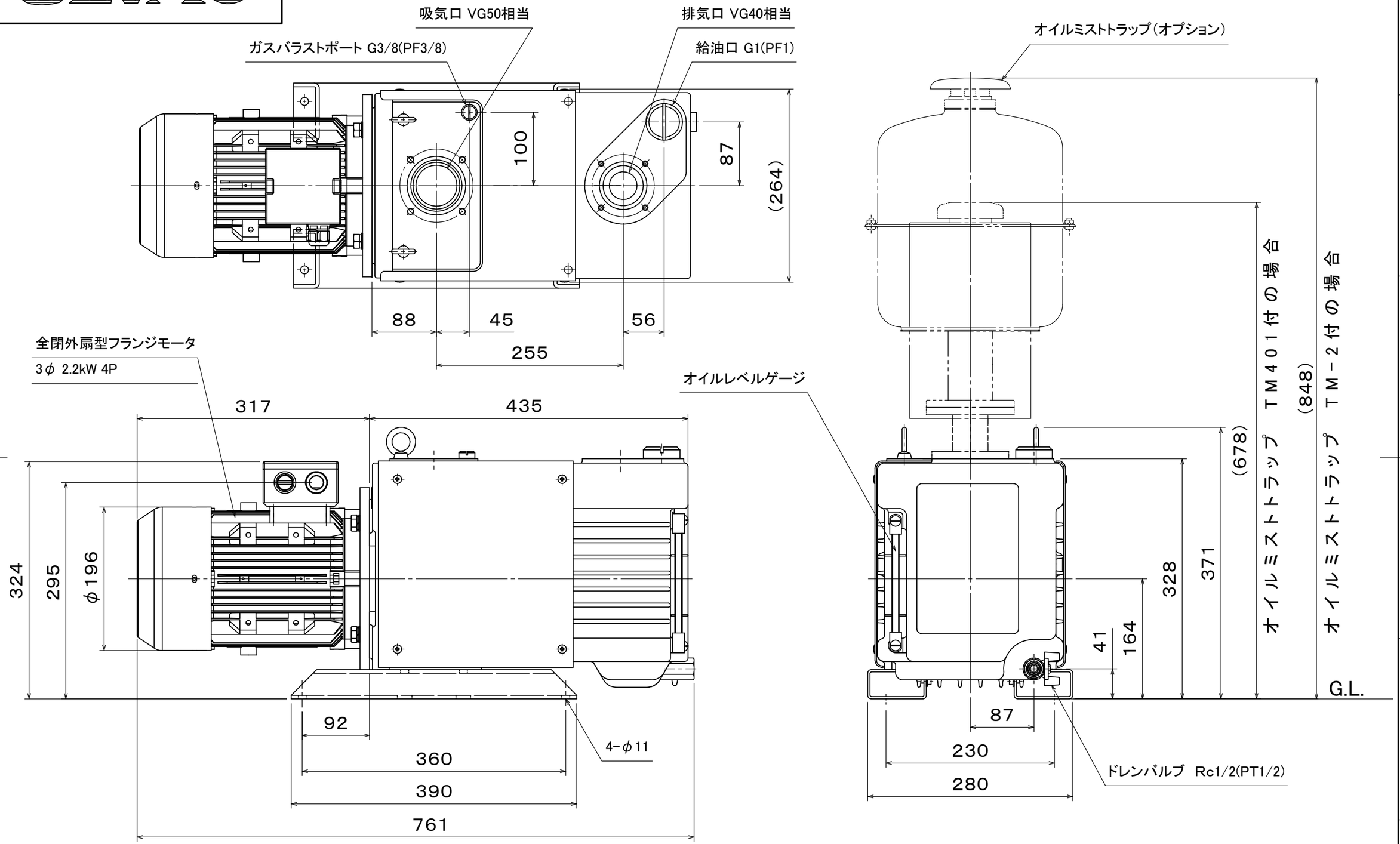


| | |
|---|---|
| TITLE | VD60C<br>外観寸法図 |
| DWG No. | KA9218-012-01A |