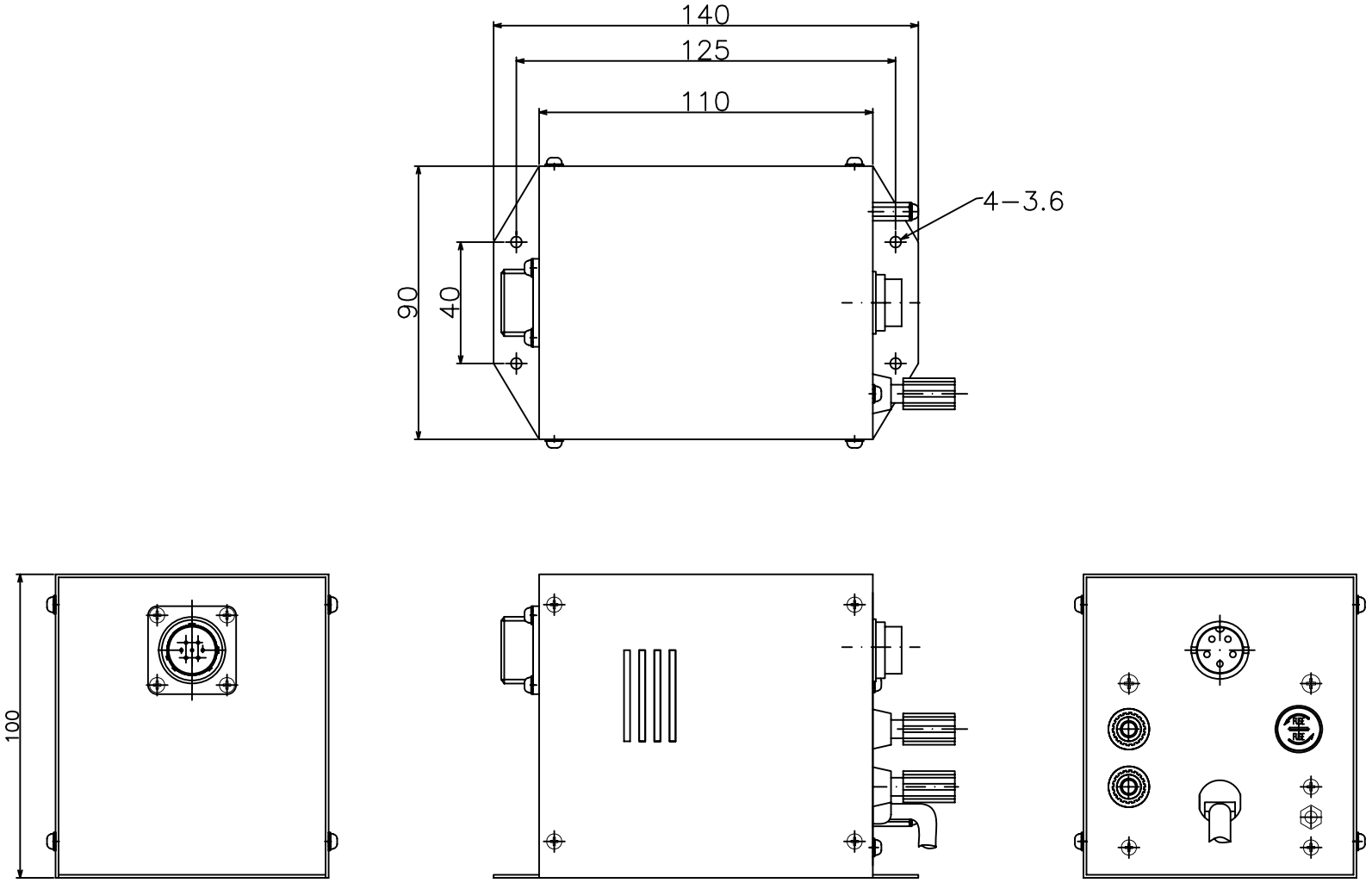

ULVAC	TITLE	GP-1GRY CONTROLL
	DWG No.	GA0122-100-00A