SK00-9664-E7-013-02

ULVAC

G-TRAN series
Multi Ionization Gauge Sensor unit
Analog Output Type　　Model ST200-A
Serial Communication Type　Model ST200-R
Specification

ULVAC, Inc.
Components Division

〒253-8543　2500 Hagisono Chigasaki Kanagawa Japan
https://www.ulvac.co.jp/en/

1 Specification

The Multi ionization gauge sensor unit ST200 is a vacuum gauge that can measure the high vacuum pressure by connecting a dedicated sensor unit (Triode gauge type).

The following two types of interfaces are available. Users can select the specification that best suits the communication protocol.

Analog output type : ST200-A (This specification)

Serial communication type : ST200-R (This specification)

(Hereinafter, ST200 refers to both ST200-A and ST200-R.)

By connecting an optional unit to ST200, ST200 can control each connected unit. According to the unit connected, the three modes below are available to measure from high vacuum to atmospheric pressure.

① ST200 stand-alone mode : ST200 only

② SWU/SPU combination mode : Pirani gauge sensor unit(SWU10-R/SPU)+ST200

③ SAU combination mode : Pressure sensor unit(SAU)+SWU10-R/SPU+ST200

※ SWU series is available in the Android/Windows-compatible pirani 【SWU10-U】and RS485 communication-compatible pirani 【SWU10-R】.
SWU written in this specification is SWU10-R. SWU10-U cannot connect to ST200.

※ Each mode is automatically set according to the connected unit.

※ SWU and SPU cannot operate at the same time.

※ SAU cannot connect to ST200 without SWU or SPU.

1.1 Standard specification

Name	Multi Ionization Gauge Sensor unit	
Model	ST200-A	ST200-R
Interface	Analog output	Serial communication
Compatible sensor ※Separately ordered	Sensor for ST200: 1pc. SWT-16(NW16), SWT-25(NW25)	

Compatible sensor unit ※Separately ordered	Pirani gauge SWU : 1pc. Pirani gauge SPU : 1pc. Pressure sensor unit SAU: 1pc.	※SWU and SPU cannot operate together ※SAU is used at the same time as SWU or SPU
Measurable pressure range(N_2)	ST200 stand-alone mode: 1.0×10^{-5}Pa to $1.0\times10^{+1}$Pa	
Accuracy(N_2)	ST200 stand-alone mode: 1.0×10^{-4}Pa to $3.0\times10^{+0}$Pa : ±10%	
Repeatability(N_2)	ST200 stand-alone mode: ±2%	
Measuring gas type	Indicate pressure as sensitivity to N_2 gas	
Emission current	2mA (1×10^{-2}Pa or lower), 10μA (1×10^{-2}Pa or higher)	
DEGAS	Electron bombard method ST200 starts DEGAS at an emission current of 2mA, grid voltage of approx.330V, and approx.1×10^{-2}Pa or less.	
Sampling time	5 times in 60msec moving average.	
Measured value output	Output voltage DC 0V to 10V, log output 0.75V/1digit Pressure conversion formula (Output voltage V[V] Pressure P[P] See section2.1) P=10^{(V-7.25)/0.75+2} V=7.25+0.75×(logP-2)	
Update time	60msec	
Resolution	Approx. 2.5mV	
Output impedance	100Ω	
Control input signal	FIL ON/OFF、DEGAS ON/OFF Work with open collector input Negative logic	
Control output signal	Sensor error, Setpoint1/2/3, Emission valid, Filament power monitoring Rated Less than the supply voltage $50mA_{MAX}$、Saturation voltage 1V	

Communication	USB Type-C	
Serial communication		RS-232C/RS-485 half duplex
Communication speed		9600/19200/38400 bps
Power LED display	POWER: White: Startup operation Blue : Normal operation Green: Filament of ST200 is on. Red : SWU/SPU, SAU power supply error, etc. (Only in the combination mode) Blinking green: Filament power abnormality, etc. Blinking red: Filament disconnection, etc.	
	SWU/SPU: Pirani gauge SWU/SPU status display ※SWU/SPU combination mode, SAU combination mode only	
	SAU: Pressure sensor SAU status display ※SAU combination mode only	
Sensor material ※Separately ordered	Filament: Ir/Y_2O_3 coated Other: PtC-Mo, SUS304, Kovar glass, Kovar/Ni plated	
Sensor breaking pressure ※Separately ordered	$2\times10^{+5}$Pa (absolute pressure) ※Please consider the breaking pressure of flanges and clamps separately.	
Operating temperature range	10℃ to 50℃	
Sensor temperature upper limit ※Separately ordered	Sensor only 150℃ Flange part of sensor 80℃ ※With ST200 removed ※When heating, deviations from specifications, such as accuracy, is observed. ※Operating temperature range of ST200 is 10℃ to 50℃.	
Operating humidity range	15% to 80% (no condensation)	

Storage temperature	-20℃ to 65℃ (Non-energized, no condensation)
IP Rating	IP30
Power supply voltage	DC 20V to 28V (Ripple, Noise 1% or less) ※Power supply voltage at the end of ST200 connector Steady state : approx. 5.5W Maximum (During degassing) : 8W or less When power turned on : 800mA or less 4msec or less Overvoltage category: Category 1 Connect to circuits where measures are taken to limit transient overvoltages to a sufficiently low level.
Corresponding standard	CE standard, UKCA standard Verified with SPU and SAU connection Display cable length: 40m Cable length between ST200 and SWU,SAU,SPU: 0.5m* *When using a unit cable of 0.5m or longer, consider noise separately.
I/O connector	D-sub15 pin connector(pin), M2.6mm screw
Weight	ST200 only: approx.280g, Sensor(SWT-16): 80g
Dimensions	Approx.69mm×63mm×90mm (ST200 only)

1.2 SWU/SPU combination mode standard specifications

Measurable pressure range	1×10^{-5}Pa to $1\times10^{+5}$Pa (When SWU connected) 1×10^{-5}Pa to $1\times10^{+4}$Pa (When SPU connected) When pressure drops: SWU/SPU indicates 2Pa or lower, SWU/SPU ⇒ ST200 When pressure rises: SWU/SPU indicates 3Pa or higher, ST200 ⇒ SWU/SPU ※ST200 measurement can be forcibly turned off with the control signal.
Accuracy(N_2)	Please refer to the accuracy of each gauge. In the overlapping pressure range of 0.4Pa to 3.0Pa, the measured pressure of the Pirani gauge (SWU/SPU) and ST200 is adjusted and output. ※SWU/SPU and ST200 have gas species dependency. Please note the difference in pressure indication when gauges switch.
POWER LED status	White: Startup operation Blue : Normal operation to SWU/SPU measurement range. Green: Filament of ST200 is on Red : SWU/SPU power supply failure Blinking green: Filament power abnormality, etc. Blinking red : Filament disconnection, etc.
Control input signal	FIL ON/OFF, DEGAS ON/OFF Work with open collector input, Negative logic ※When FIL ON/OFF signal is Lo input, the filament of ST200 is off.

1.3 SAU combination mode standard specifications

Measurable pressure range	1×10^{-5}Pa to $1\times10^{+5}$Pa When pressure drops: SAU indicates 10000Pa or lower, SAU ⇒ SWU/SPU When pressure drops: SWU/SPU indicates 2Pa or lower, SWU/SPU ⇒ ST200 When pressure rises: SWU/SPU indicates 3Pa or higher, ST200 ⇒ SWU/SPU When pressure rises: SAU indicates 10000Pa or higher, SWU/SPU ⇒ SAU ※ST200 measurement can be forcibly turned off with the control signal.
Accuracy(N_2)	Please refer to the accuracy of each gauge. In the overlapping pressure range of 0.4Pa to 3.0Pa, the measured pressure of the Pirani gauge (SWU/SPU) and ST200 is adjusted and output. ※Since SAU measures by gauge pressure and SWU/SPU measures by absolute pressure, errors between SAU and SWU/SPU occur due to the altitude and air pressure. ※SWU/SPU and ST200 have gas species dependency. Please note the difference in pressure indication when gauges switch.
POWER LED status	White: Startup operation Blue : Normal operation to SAU, SWU/SPU measurement range. Green: Filament of ST200 is on. Red : SAU, SWU/SPU power failure Blinking green: Filament power abnormality, etc. Blinking red : Filament disconnection, etc.
Control input signal	FIL ON/OFF, DEGAS ON/OFF Work with open collector input, Negative logic ※When FIL ON/OFF signal is Lo input, the filament of ST200 is off.

1.4 Include items

Multi-ionization gauge ST200-A/R	1pc
Sensor for ST200 SWT series*	1pc
Quick Manual	1paper

* Only when you order at the same time as ST200, it will be attached to ST200 and delivered.

* The sensor model is the one you specified when ordering.

1.5 Items that need to be ordered separately

Sensor for ST200	SWT-16(NW16), SWT-25(NW25)
Baffle for sensor	for SWT-16, for SWT-25 *Installed inside the sensor
Connector for ST200	D-sub15 pin connector(socket), M2.6mm screw *unwired
Calibration certificate	Calibration certificate JCSS calibration certificate
Inspection certificate	
Traceability certificate	
Display unit	Model ISG1 (DC24V power supply)
Display cable	Cable connecting ST200 and display unit 2m, 5m, 10m, 15m, 20m, 25m, 30m, 35m, 40m
Pirani vacuum gauge sensor unit	SWU/SPU
Sensor for SWU SWP series	SWP-16, SWP-25, SWP-CF16, SWP-P15, SWP-P18, SWP-R1/8, SWP-1S
Sensor for SPU WP series	WP-01, WP-02, WP-03, WP-16
Unit cable GUC-P	Cable connecting ST200 and SWU/SPU 0.5m, 1m, 2m
Pressure sensor	SAU *Requires SWU or SPU for operation.

Unit cable GUC-A	Cable connecting ST200 and SAU 0.5m, 1m, 2m *The connector that connects this unit cable and SAU are connected by a cable of about 0.5m.

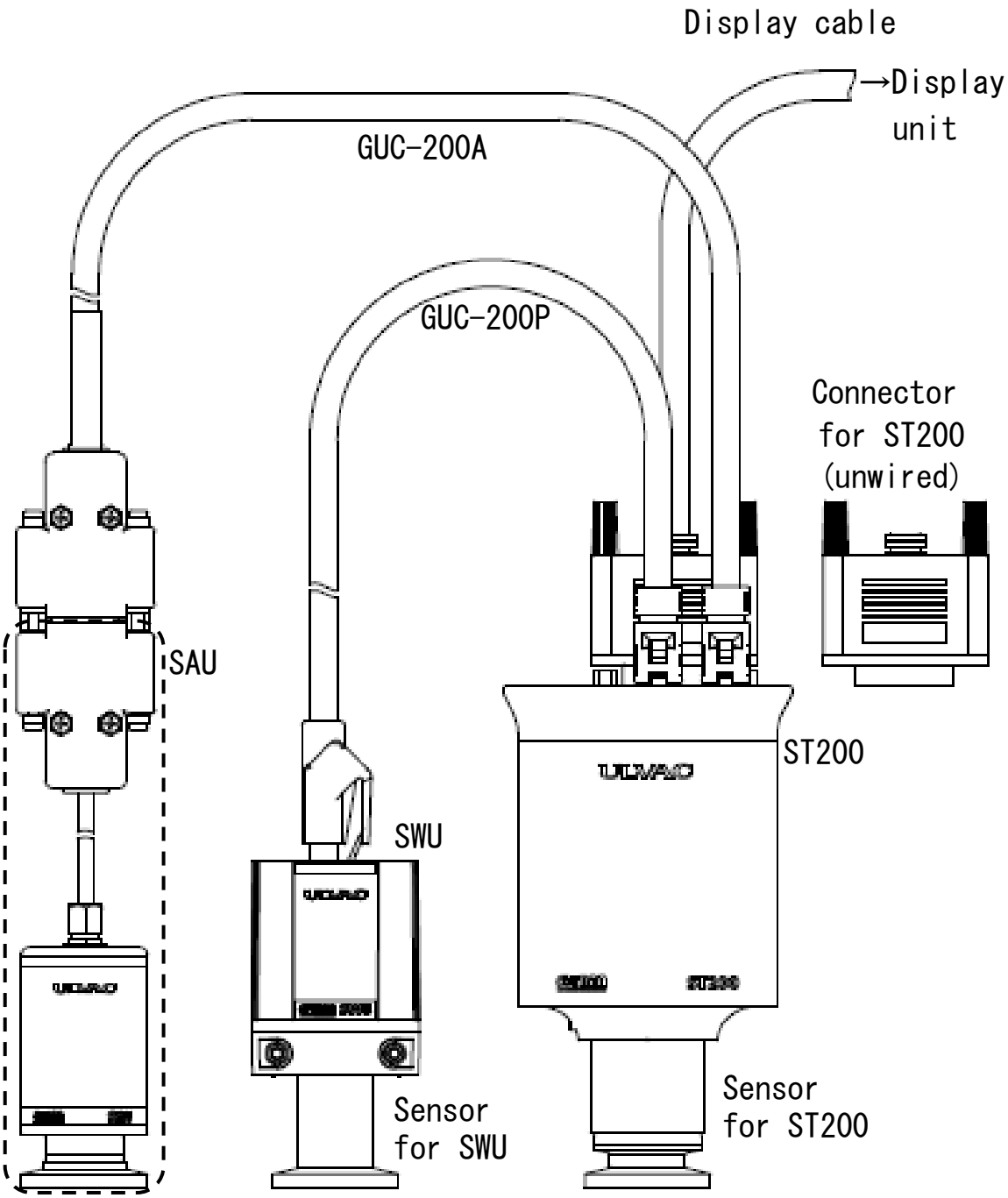

※SWU can be replaced with SPU

1.6 Pin layout

Analog output type ST200-A (D-sub15 pin connector (male), M2.6mm screw)

Pin number	This unit	Function
1	Power supply	Power supply for driving this unit
2	Sensor error	It outputs a signal when an error occurs, such as filament disconnection.
3	Setpoit1	It outputs a signal when setpoint1 is operating.
4	Emission valid	It outputs a signal when the emission current is normal.
5	FIL ON/OFF	It inputs ON/OFF signal of the filament. ※FIL ON signal in ST200 stand-alone mode ※FIL OFF signal in the combination mode
7	FIL power monitoring	It output a signal when a filament approaching the end of the product life.
8	Measured value output	It outputs a measured value.
9	Power supply GND	Ground for the power supply
10	Signal GND	Ground for the output signal
11	Setpoint2	It outputs a signal when setpoint2 is operating.
13	DEGAS ON/OFF	It inputs a signal when DEGAS is on.
14	Setpoint3	It outputs a signal when setpoint3 is operating.
15	Signal GND	Ground for the output signal
Case	Frame ground	Ground for frame

Serial communication type ST200-R

(D-sub15 pin connector (male), M2.6mm screw)

Pin number	This unit	Function
1	Power Supply	Power supply for driving this unit
4	RS232C RxD	RxD of RS-232C
5	Terminating resistor for RS485	Terminating resistor for RS-485. It is connected to pin 13.
6	RS232C TxD	TxD of RS-232C
8	Measured value output	It outputs a measured value.
9	Power Supply GND	Ground for the power supply
10	RS485-	Minus of RS-485
12	RS485+	Plus of RS-485
13	RS485+ (For connecting the terminating resistor)	Terminating resistor for RS-485. It is connected to pin5.
14	RS232C GND	Ground for RS-232C
15	Signal GND	Ground for the output signal
Case	Frame ground	Ground for frame

2 Measured value output (common for ST200-A/ST200-R)

This unit outputs the measured value as a voltage signal of DC 0V to 10V.

I/O connector: 8 pin[Measured value output+]-15 pin[GND] (See section1.6)

2.1 Pressure conversion formula

Use the following formula to convert to pressure.

$$P=10 \hat{} \{(V - 7.25) / 0.75 + k \} \Leftrightarrow V = 7.25 + 0.75 \times (\log P - k)$$

P: Pressure

V: Output voltage[V]

k: Pressure unit factor(see table below)

圧力単位	k
Pa	2
Torr	-0.1249
mbar	0

2.2 ST200 stand-alone mode measured value output

The measured value output in several statuses that can occur during a measurement is shown in Table 2-1 below.

Table 2-1 Measured value output status (stand-alone)

Operating status	Measured value output voltage
Filament is off	9.9V or higher
Normal measurement	2.0V to 6.5V
ST200 error (such as filament disconnection)	9.9V or higher
Power supply voltage error, sensor unit failure	0.1V or lower

※Output voltage: $0.1 < V \leqq 2.0$ corresponds to pressure: $P \leqq 1.0 \times 10^{-5}$Pa.

2.3 SWU/SPU combination mode measured value output

The measured value output in several statuses that can occur during a measurement is shown in Table 2-2 Measured value output status (SWU/SPU combination mode) below.

Table 2-2 Measured value output status (SWU/SPU combination mode)

Operating status	Measured value output voltage	
	When SWU connected	When SPU connected
Normal measurement	2.0V to 9.5V	2.0V to 8.75V
$1\times10^{+5}$Pa or higher	9.5V	
$1\times10^{+4}$Pa or higher		8.75V
ST200 filament turned off.	4.25V to 9.5V	5V to 8.75V
ST200 error (such as filament disconnection)	4.25V to 9.5V	5V to 8.75V
SWU/SPU error (such as filament disconnection)	9.9V or higher	
Power supply voltage error, sensor unit failure	0.1V or lower	

※Output voltage: $0.1 < V \leqq 2.0$ corresponds to pressure: $P \leqq 1.0\times10^{-5}$Pa.

※ST200 outputs errors even when SWU/SPU has errors.

However, ST200 error clears when filament turns off.

2.4 SAU combination mode measured value output

The measured value output in several statuses that can occur during a measurement is shown in Table 2-3 below.

Table 2-3 Measured value output status (SAU combination mode)

Operating status	Measured value output voltage	
	When SWU connected	When SPU connected
Normal measurement	2.0V to 9.5V	
Higher than atmospheric pressure	9.5V or higher	
ST200 filament turned off.	4.25V to 9.5V	5V to 9.5V
ST200 error (such as filament disconnection)	4.25V to 9.5V	5V to 9.5V
SWU/SPU error (such as filament disconnection)	8.68V to 9.5V	
SAU error	9.9V or higher	
Power supply voltage error, sensor unit failure	0.1V or lower	

※Output voltage: $0.1 < V \leqq 2.0$ corresponds to pressure: $P \leqq 1.0 \times 10^{-5}$Pa.

※ST200 outputs errors even when SWU/SPU or SAU has errors.

However, ST200 error clears when filament turns off.

3 Control input/output signal

3.1 Control input signal (Analog output type ST200-A only)

Figure 3-1 ST200-A input signal internal circuit diagram

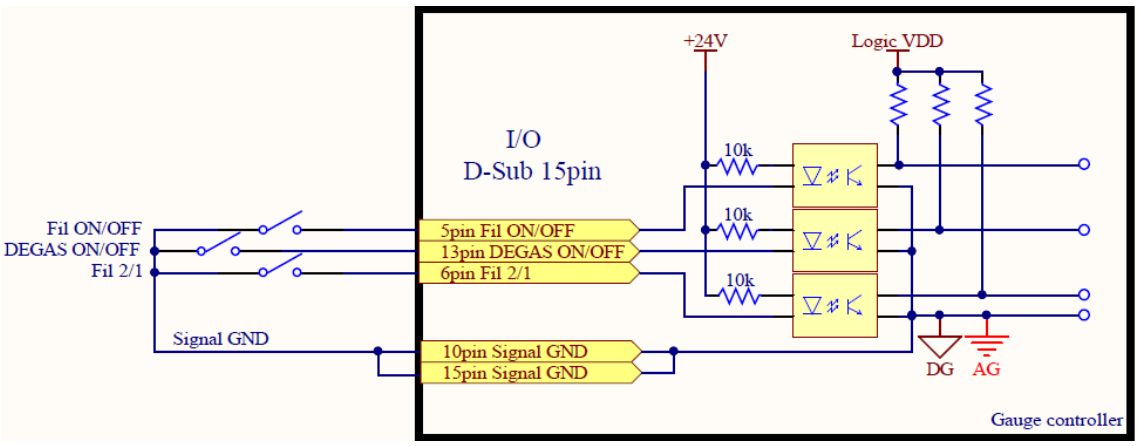

3.2 Control output signal (Analog output type ST200-A only)

Photocoupler ratings [30V$_{MAX}$, 50mA$_{MAX}$, 70mW]

Figure 3-2 ST200-A output signal internal circuit diagram

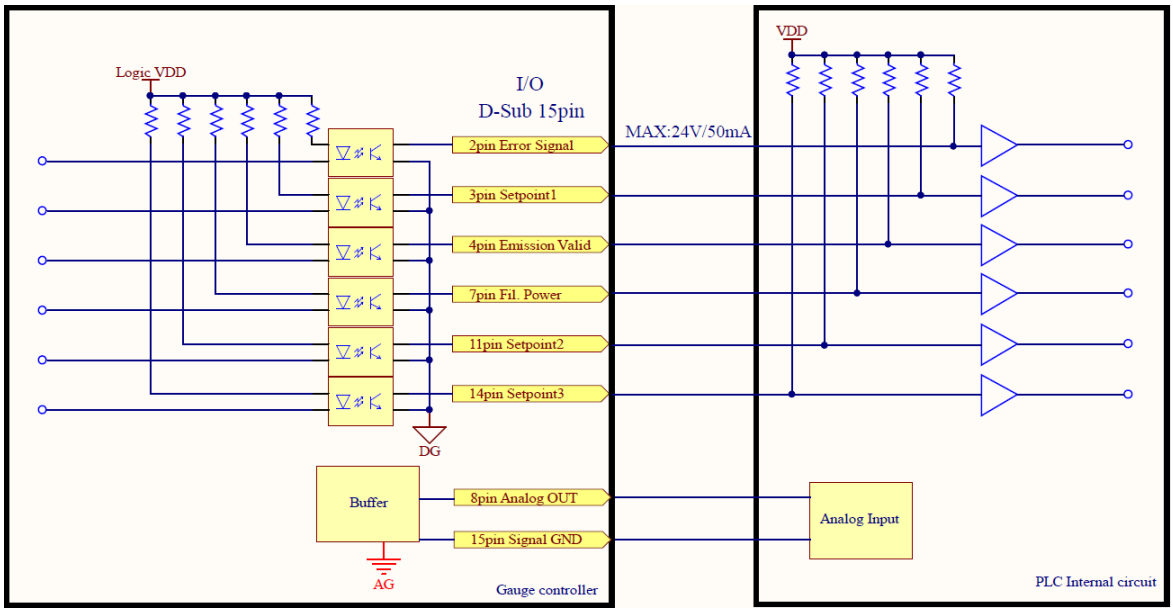

4 How to use serial communication (Serial communication type ST200-R only)

4.1 Communication specifications

RS-232C	RS-485
Two-wire type	
Half-duplex	
Asynchronous	
ASCII code	
Data bit length 8bit	
Stop bit 1bit	
No parity	
Maximum cable length 15m	Maximum cable length 1200m*1
Maximum connections: 1	Maximum connections: 32 (including host)
9600/19200/38400 bps	9600/19200/38400 bps

*1：Please check a specification of remote host and an environmental noise if you use the cable of 30m or more.

4.2 Settings

4.2.1 Connection diagram

4.2.1.1 RS-232 C connection diagram

An example of RS-232C connection is shown below.

The host side is a D-sub 9pin

This unit pin No.			Host side pin No.	
RxD	4		2	RxD
TxD	6		3	TxD
GND	14		5	GND

4.2.1.2 RS-485 without terminating resistor (Example)

Example) USB serial interface USB-485 manufactured by NATIONAL INSTRUMENTS.

This unit pin No.		Host side pin No.	
RS485+	12	4	RxD+
		8	TxD+
RS485-	10	5	RxD-
		9	TxD-
GND	14	1	GND

4.2.1.3 RS-485 with terminating resistor (Example)

Example) USB serial interface USB-485 manufactured by NATIONAL INSTRUMENTS.

If the number of RS-485 connections is large, the total length of the connection cable is more than 15m, or communication errors frequently occur, install a terminating resistor in the terminating equipment.

This unit pin No.		Host side pin No.	
RS485+	12	4	RxD+
		8	TxD+
RS485-	10	5	RxD-
		9	TxD-
GND	14	1	GND
terminating resistor	5		
RS485+	13		

4.3 Standard data format

The following is the standard data format for sending and receiving.

:	AD0	AD1	CMD	D0	……	Dn	SH	SL	CHKH	CHKL	CR

:	Colon
AD0	Device address, higher 4bit (0～9)
AD1	Device address, lower 4bit (0～9)
CMD	Commands (upper/lower case-sensitive)
D0	Data 4bit (0～9, A～F)
Dn	Data 4bit (0～9, A～F)
SH	Higher bits of status (4bit)
SL	Lower bits of status (4bit)
CHKH	Higher bits of checksum (4bit) (0～9, A～F)
CHKL	Lower bits of checksum (4bit) (0～9, A～F)
CR	Carriage return

- Commands consist of alphanumeric uppercase and lowercase characters.
- The checksum is the exclusive OR sum (XOR) from AD0 to SL. All characters must be converted by the hexadecimal notation of ASCII code.

4.3.1 Command list

Command	Description	Command	Description
D	Read measured value and status	1R	Read Setpoint1 value
T	Model and software version	1W	Write Setpoint1 value
ATM	SAU/SWU Atmospheric Pressure Adjustment	2R	Read Setpoint2 value
ZER	SAU/SWU Zero Point Adjustment	2W	Write Setpoint2 value
CLR	Initialize SAU/SWU atmospheric pressure and zero point adjustment Read status	MDR	Read Mode setting
		MDW	Write Mode setting
SR	Write status	4AR	Read Address setting
SW	Check error contents	4AW	Write Address setting
ERR	Check Filament power monitoring value	4BR	Read communication speed
FIL	SAU/SWU Atmospheric Pressure Adjustment	4BW	Write communication speed

4.4 Command (Excerpt): Reading measured value and status

Command

:	AD0	AD1	D	CHKH	CHKL	CR

Return format from this unit to PC

:	AD0	AD1	D	X	.	X	X	E	±	X	X	SH	SL	CHKH	CHKL	CR

- 「X.XXE±XX」 is the measured pressure value.

  e.g.1) 3.00E+03 ⇒ $3.00 \times 10^{+3}$

  e.g.2) 5.00E+00 ⇒ $5.00 \times 10^{+0}$

  e.g.3) 4.00E-01 ⇒ 4.00×10^{-1}

- When 「E.EEE+EE」 is returned.: Sensor error
- When 「F.FFE+FF」 is returned.: In ST200 stand-alone mode only, when the measurement range is exceeded, or filament is off.
- Please refer to section 4.3 for 「SH」 and 「SL」.

5 Warranty

This unit is strictly inspected in-house before it is shipped out. However, should any failure that is our responsible occur, such as defects in manufacturing or accidents during transportation, please contact the Components division of ULVAC, Inc. or the nearest sales office or distributor. We will repair or replace it free of charge.

Warranty covered items

Multi ionization gauge sensor unit ST200

Warranty period

One year from the date of delivery

Warranty scope

1) Domestic transaction：A product that is damaged due to the problem during transportation at the time of delivery.
2) Direct export transaction：A product that is damaged due to problem during transportation at the time of delivery. The warranty scope specified in the latest INCOTERMS shall be applied.
3) A product that does not meet the basic specifications of this unit even though it is used within the operating conditions of the basic specifications, such as the measurement pressure, the operating temperature limits, and the operating power supply.

Warranty support

1) Domestic transaction: We will send you a replacement. Or we will ask you to send the unit to the nearest service center or us for repair. If you need local support, please contact the Components division of ULVAC, Inc. or your nearest sales office or distributor.
2) Direct export transaction: We will send you a replacement. Or we will ask you to send the unit to the nearest service center or us for repair. Please note that the customer is responsible for return shipping costs.

Disclaimer

1) Products that are out of warranty period.
2) Failures and malfunctions caused by natural disasters such as fires, storms, floods, earthquakes, and lightning, and force majeure disasters such as wars.
3) Failure or malfunction caused by careless handling or improper use.
4) Products that are modified, disassembled, or repaired without our consent.
5) Defects and damages under an abnormal environment (Strong electromagnetic field, radiation environment, high temperature, high humidity, flammable gas atmosphere, corrosive gas atmosphere, dust).
6) Failures and malfunctions caused by noise.
7) Secondary damage caused to you by product defects or a third party's claim that we infringe a patent.
8) Sensor unit in use (Lifespan due to the use, measurement error due to contamination).
9) Sensor cable in use (Cable disconnection or poor contact due to improper installation).

Other

1) If there is a separate contract or memorandum regarding specifications besides this instruction manual, the contents of the contract or memorandum will be followed.
2) When exporting this product outside of Japan, please notify us and take necessary procedures according to Export Related Legislation such as the Foreign Exchange and Foreign Trade Act.
3) Should you have any questions or need consults about this product, please check the model and the serial number and contact the nearest sales office, distributor, or the Components Division of ULVAC, Inc.
4) Please note that the contents of this instruction manual are subject to change without notice.

6 Diagrams

6.1 ST200, SWU and SAU connection diagram

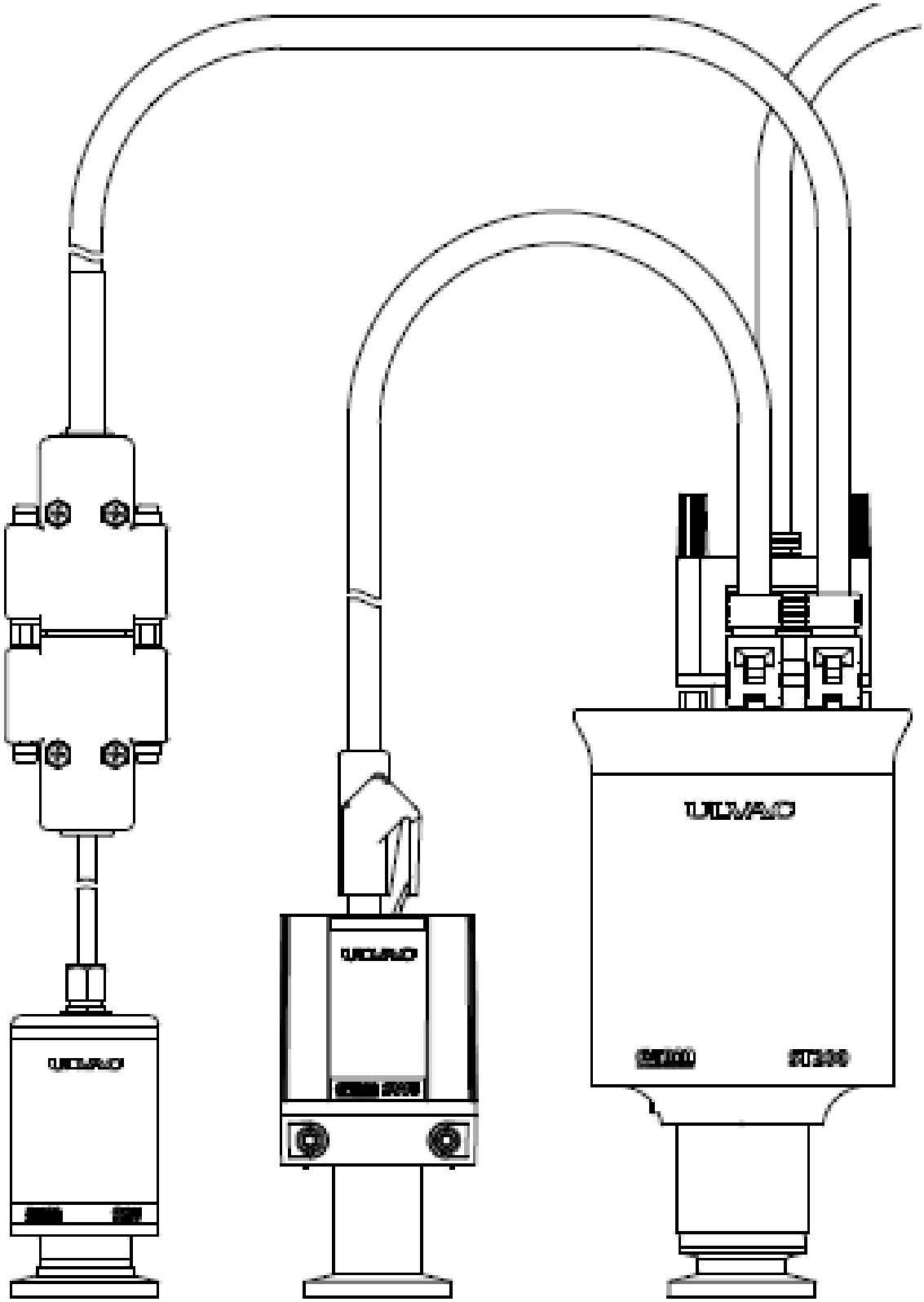

6.2 ST200 and SWU connection diagram

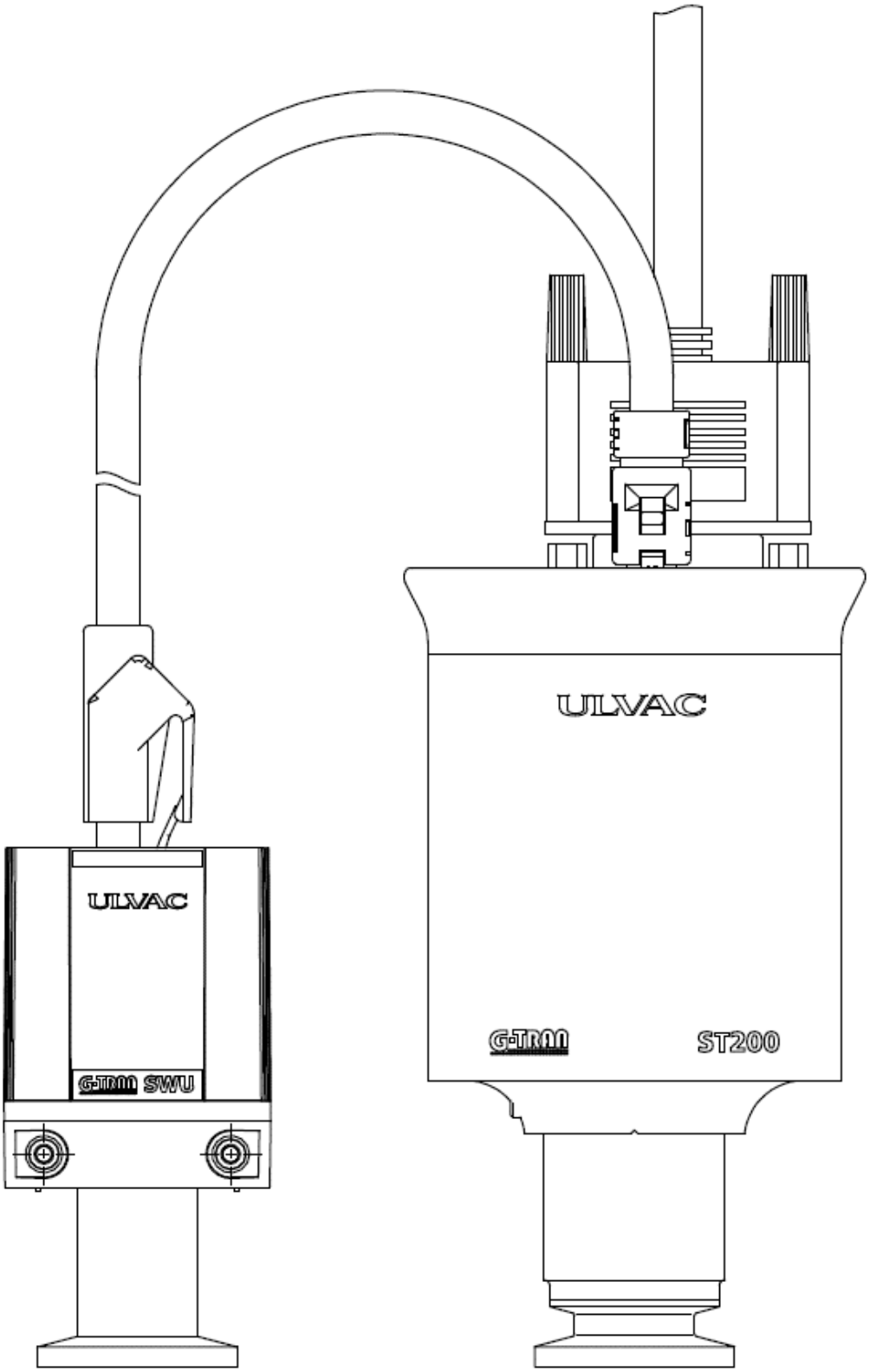

6.3 ST200 dimensions