リモート用コネクタに関する重要なお知らせ

本製品にリモート用コネクタが付属されています。
遠方にて起動・停止を行わない場合でも、付属のリモート用コネクタを本製品に取付けなければ起動できません。
遠方にて起動・停止を行わない場合でも、必ず付属の状態のリモート用コネクタを下図のリモートコネクタに取付けて下さい。（リモート用コネクタへの信号線の配線は不要です。）

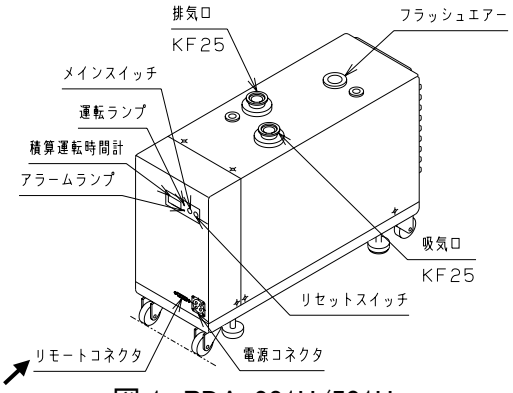

図 1. RDA-281H/501H

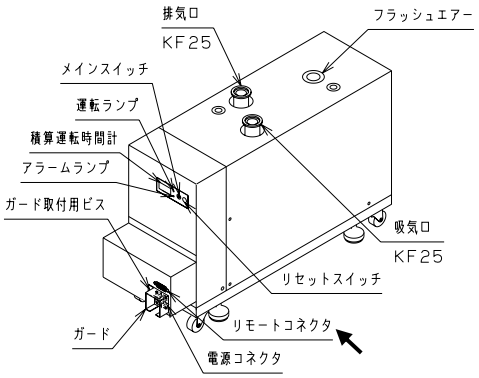

図 2. RDA-281HA/501HA

The important information about the remote connector

The remote connector is accessories of this product.
This product cannot start when a remote connector attached to is not mounted even if this product is not operated in remoteness.
Please mount a remote connector on the part of the remote connector of the figure by all means even if this product is not operated in remoteness.(The wiring of the signal line to a remote connector is unnecessary.)

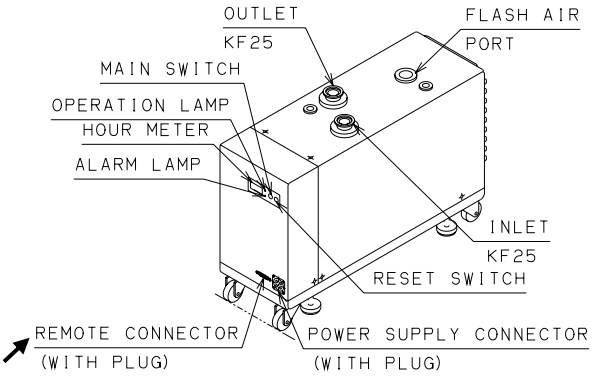

Figure 1. RDA-281H/501H

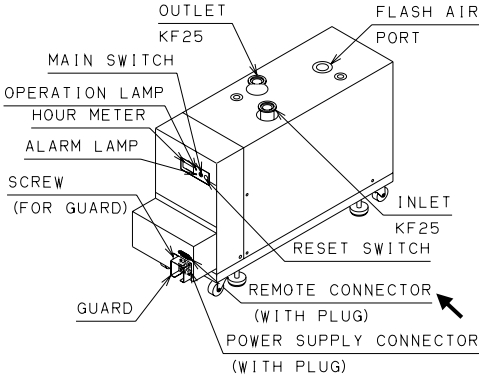

Figure2. RDA-281HA/501HA

No.49901-2-01-3

ULVAC

INSTRUCTION MANUAL

MULTI-STAGE ROOTS VACUUM PUMP

RDA-281H/RDA-501H

Request

Please read this Instruction Manual before starting the pump in order to use the pump effectively and safely.

Please keep this Instruction Manual carefully.

We reserve our right to change dimensions or specifications of the motors described in this Instruction Manual for improvement of the performance without prior notice.

ULVAC KIKO,Inc.

0. Before Using This Product

We thank you very much for purchasing our product.
You are kindly requested, upon delivery of the product, to check that the delivered product is exactly what you have ordered and it has no damage caused by transport or the like.
This manual gives description on operation and maintenance procedure appropriate to use the product in safe and effective way. Please read this manual beforehand to correctly use the Pump.
You are requested to install and operate the product in compliance with the laws and regulations relating to the safety, e.g. Fire Defense Law, Electric wiring regulation and so on in the country and region you use the product. Consequently you shall be requested to attend general safety lectures officially effective in the area, such as electrical safety, Cargo handling safety and so on. Note that any person not attended such lectures shall be restricted from handling the product. Operators shall need to attend such kind of training and have special knowledge, skill and title regarding the electricity, machinery, cargo, vacuum and so on.
This product is designed to conform to regulations valid at the time of issue of this manual and its conformity is not ensured if any of regulations shall be changed in the future.
The performance and safety of the product might not be ensured if any of the devices put together did not conform to same regulations or the product itself was modified. Our company shall be not liable to guarantee performance and safety in such cases above. Any modification of the product by the user is out of the scope of guarantee by us and not be guaranteed in any manner.
Be sure to clear any energy sources, e.g. electricity, coolant and so on of the product before installing or removing the product.
Please note that any of the parts used in this product shall keep the performance at the time of the shipment but shall not survive eternally. Any of the parts cannot, under any application supposed under socially-accepted idea, help but inevitably deteriorate its performance and get easily result in causing trouble of the product. You are kindly requested consequently to take your application situation into consideration and help yourself to implement the protective maintenance so as to avoid troubles.
Through implementation of the protective maintenance, you shall reduce occurrence of the trouble due to wear and/or failure of the part and bring reducing the occurrence of the downtime caused by the product trouble and fire as well as a risk of affecting the another process.
We would like to ask you again to establish the protective maintenance plan as well as conduct the part replacement and overhaul in accordance with such a plan.
Please do not hesitate to contact our sales office or agency for unclear on the use.

CAUTION

0.1 Safety Symbol Marks

We display symbol marks regarding the safety in this manual and on the product to make clear items to observe. Descriptions attached to the symbol are classified as illustrated below;

0.2 Meanings of Safety Symbol Marks

DANGER	**If the user makes a mistake in handling, it indicates an imminent possibility that the user is subject to death or heavy injury.**
WARNING	**I If the user makes a mistake in handling, it indicates a possibility that the user is subject to death or heavy injury.**
CAUTION	**If the user makes a mistake in handling, it indicates a possibility that the user is subject to moderate injury or it leads to significant damage of the machine. It indicates a possibility that damage of the machine is caused and the normal operation is impaired.**
IMPORTANT	**[IMPORTANT] description shall be given where there is particular information to notice for the operation or maintenance work of the product.**

Training for the electrical safety is required as there is a risk of electrical shock.

Check and ensure that the pump is sufficiently cooled down as this section keeps high temperature after having stopped the pump.

0.3 Safety Precautions

Descriptions are given as the method to keep away from danger and actions that must be restricted on the use of the product.

Use of this product and this instruction manual.

IMPORTANT	**Please read this Instruction Manual before starting installation, operation check or maintenance of this product to use it in long term. You are requested to fully understand the safety precautions, specifications and operation methods of the product.**
⚠ **DANGER**	**Use of the toxic, combustible or combustion susceptible gas other than inactive gas is not allowed as there is a risk of leakage of the gas from the Pump unit if it was exhausted by the vacuum pump.**
⚠ **DANGER**	**Use of the toxic, combustible or combustion susceptible gas and substance other than inactive gas is not allowed as there is a risk of causing fire or explosion inside the Pump unit if it was exhausted by the vacuum pump.**
⚠ **WARNING**	**We would be obliged to refrain from handling and/or executing maintenance of the product if the detail of used hazardous substance was not disclosed or the product has exhausted such substance that the detoxification process is hardly conducted.**
⚠ **WARNING**	**You are kindly requested to acknowledge that specifications and/or price of the product and description of the Instruction Manual are subject to change without prior notice for improvement.** **Any change shall update the version number at the top right of the Instruction Manual cover and issue the revised version.**
⚠ **WARNING**	**This Instruction Manual shall absolutely need to be delivered to the last user that uses the product.**
⚠ **WARNING**	**To export this product abroad, you have to clear the examination in accordance with the Foreign Exchange law, Foreign Trade law and relevant decree, ordinance and order.** **Please feel free to contact our sales office or agency closest to you.**

Installation and storage

WARNING

(1) Do not push the Pump over sideways because it is shipped with lubrication oil filled up.
(2) Give the instruction them further to use the unloading machinery such as crane to take out the product of the cardboard, lift it up with its top eyebolt and transfer it on lifting. Check the eyebolt whether it has no error before use.
(3) Only the technically entitled person should be in charge of conducting the unloading operation and operating the unloading machinery.
(4) There is a risk that the Pump might drop or lay down when attempted unreasonable operation or machinery setup was not sufficient. You are strictly restricted to enter beneath the Pump.

Transfer

WARNING

(1) Although this pump is provided with casters, do not move it a long distance using these casters.
(2) Weight of this product is as follows.
RDA-281H,RDA-501H : 38 kg
You have a risk of giving damage to your back as the load larger than safety standard shall be required to transfer the product. Be sure to use the loading machinery (such as mobile crane) to lift up the Pump or load it on the pallet and fix it with Jack and run the Pallet truck for its transfer.

Countermeasure to the earthquake

WARNING

There is a risk that the Pump lays down or slides and breaks peripheral units if it was not correctly fixed. Be sure to give allowances to the vacuum piping, and electric cables so that they absorber vibrations to prevent them from breaking and/or dismantling.

Inlet piping <Mounting>

WARNING

Check and ensure that any of hazardous energy is blocked before starting the operation.

Power Supply wiring <Mounting>

WARNING

(1) Check and ensure that any of hazardous energy is blocked before starting the operation.
(2) Entitled staff should conduct the wiring operation. Erroneous wiring work might cause a fire.
(3) Conduct the wiring operation correctly in compliance with laws and rules concerning the safety (e.g. Fire Defense Law, Electric Equipment Technology standard, Internal line cord) in the country and region you use the product.
(4) Ensure to have a correct grounding.
(5) You are recommended further to install a dedicated Leak breaker. You have a risk of getting electrical shock in case of failure or electric leakage.

Operation

WARNING

(1) Do not open pump cover during operation. Do not touch the motor, vacuum pump or piping because their temperature get very high. You have a risk of getting burned if a part of your body touched it.
(2) Do not run the Pump on blocking the exhaust outlet or putting any device that might hamper gas passage onto the outlet. There is a risk that the pressure inside the vacuum pump rises up and it causes break or oil leak of the casing or oil level gauge resulting in overload of the motor.
(3)Do not touch, open the pump cover because the motor, pump or pipe is and remains very hot while after having stopped operation. You have a risk of getting burned if a part of the body touched it.

CAUTION

(1) Do not operate the Pump in hazardous area (where there is a risk of creating hazardous atmosphere by explosive gas). It might cause injury and/or fire.
(2) Do not attempt to put your hand or object in the opening of the ventilation; you have a risk of getting injury or casing a fire.
(3) Strictly refrain from putting any combustible substance in and around 1m of the Vacuum pump; there is a risk of getting a fire.
(4) Do not put a wall or obstacle in and around 0.3m of the opening the ventilation. You have a risk of getting burned or fire caused by over heat.

Check and repair

WARNING

(1) Be sure to turn OFF the MCCB (Molded Case Circuit Breaker) primary side utility before executing check and repair. You have a risk of getting electrical shock or injury by accidental sudden move.
(2) Person other than Repair technician should not be in charge of dismantling, repairing or remodeling the product.
You have a risk of getting injured or electrical shock by a fire or erroneous move. You have a risk of getting injured or electrical shock by a fire or erroneous move.
(3) Should you found any malfunction or error, just turn OFF the MCCB (Molded Case Circuit Breaker) primary side utility to prevent accident and ask the agency or closest Service Center for check and repair.

Power Supply wiring <Dismantling>

WARNING

Be sure to cut off the electricity before starting install or dismantling operation.

Inlet piping <Dismantling>

WARNING

(1) Take off the piping following the Install Manual of the pump.
(2) Inlet piping remains very hot wile after having stopped the Pump. Be sure to take it off after the Pump has sufficiently cooled down.
(3) Make the Pump exhaust outlet airtight completely with a blank flange.

Transfer

WARNING

(1) Although this pump is provided with casters, do not move it a long distance using these casters.
(2) Weight of this product is as follows.
RDA-281H.RDA-501H : 38 kg
You have a risk of giving damage to your back as the load larger than safety standard shall be required to transfer the product. Be sure to use the loading machinery (such as mobile crane) to lift up the Pump or load it on the pallet and fix it with Jack and run the Pallet truck for its transfer.

0.4 Types and Descriptions of Warning Labels Displayed on this Pump and Displayed Positions

Warning labels are attached on the warning locations in this pump. Be sure to check them before starting operation of the pump.

There is a risk of getting electrical shock around the section that this warning label is put. Be sure to turn OFF the MCCB (Molded Case Circuit Breaker) primary side utility to execute the wiring and/or maintenance work. Never fail to close the Terminal box cover to operate the Pump.

The whole part becomes hot during operation of the Pump. Do not touch during or just after stopped operation while the Pump unit remains very hot.

0.5 Acceptance and Storage of the Pump

0.5.1 Unpacking/Acceptance of the Pump

WARNING

(1) Do not push the Pump over sideways because it is shipped with lubrication oil filled up.
(2) Give the instruction them further to use the unloading machinery such as crane to take out the product of the cardboard, lift it up with its top eyebolt and transfer it on lifting. Check the eyebolt whether it has no error before use.
(3) Only the technically entitled person should be in charge of conducting the unloading operation and operating the unloading machinery.
(4) There is a risk that the Pump might drop or lay down when attempted unreasonable operation or machinery setup was not sufficient. You are strictly restricted to enter beneath the Pump.

Upon delivery of the product, open the package carefully. Check first that the delivered is exactly what you have ordered and there is no break or damage through transport or the like. Claim after use of the product might be resolved with a charge.
Although we pay full attention on shipping, you are kindly requested to check the following upon unpacked the product. Keep original packaging until inspection is completed. Use it for returning when there is abnormally.

IMPORTANT

(1) Whether the delivered is exactly the one you have ordered.
(2) Whether accessories (Instruction manual, optional parts) are attached or not.
(3) Whether there is no break or damage through transport or not.
(4) Whether any bolt or nut got loose or taken off through transport or not. Should you found any trouble, please do not hesitate to contact please contact the vendor.

【Table. 1】 Standard accessories

Name	Specification	Quantity	Remark
Power Connector	NET Connector (Nanaboshi)	1 set	NET-244-PF
Remote Connector	D-sub 15pin (DDK)	1 set	17JE-23150-02(D8A)-CG
Instruction Manual	–	1 copy	Plain paper
Eyebolt	For pump lifting	2 pcs	M8

0.5.2 Transfer

WARNING

(1) Although this pump is provided with casters, do not move it a long distance using these casters.
(2) Weight of this product is as follows.
RDA-281H,RDA-501H : 38 kg
You have a risk of giving damage to your back as the load larger than safety standard shall be required to transfer the product. Be sure to use the loading machinery (such as mobile crane) to lift up the Pump or load it on the pallet and fix it with Jack and run the Pallet truck for its transfer.

0.5.3 Ambient Condition for Storage, Install and Operation

As precise clearances are provided with this machine, be sure to fulfill the following for its storage, install and operation;

(1) Ambient temperature and humidity for storage : -10°C to 60°C, less than 90%RH

(2) Ambient temperature and humidity for operation : 5°C to 40°C, less than 80%RH

The pump internal parts may seize and cause the pump to stop operating.

Also, even if the pump is operated within the ambient temperature range,

if the pump is operated immediately after being moved from an environment with

an ambient temperature lower than 5ºC, seizing may occur.

For details, refer to "0.5.4. Operating in cold environments "

(3) Height (for both storage and operation) : Lower than el. 1,000m.

(4) External vibration (for both storage and operation) : Vibration acceleration less than114dB (0.5G)

(5) Miscellaneous (for both storage and operation) :

a. There shall be no corrosive and explosive gas.

b. There shall be no freezing or condensing.

c. There shall be no dust.

d. The pump shall be used in ventilated indoor.

e. Another pump shall not be put on the Pump. The Pump shall not be laid down sideways.

f. There shall be no direct sun beam.

g. Heat source shall be put away from the Pump.

h. After moving the pump to place of installation, set it in a horizontal position,

I. Ensuring the ventilation space of at least 0.3m from the opening the ventilation.

WARNING

Do not install directly on the ground by removing the casters. Ventilation openings under the pump are blocked, you have a risk of getting burned or fire caused by over heat.

CAUTION

Do not give the Pump a shock or lay it down. It might impair the Pump operation. Set it in a horizontal position keeping inlet flange upward.

CAUTION

If have been kept at a temperature lower than the ambient temperature is operable, please drive temperature of the pump body from the Ambient temperature and humidity for operation.

0.5.4 Operating in cold environments

The ambient temperature range of the pump is 5ºC to 40ºC.

If the pump is operated in an ambient temperature lower than 5ºC,

the pump internal parts may seize and cause the pump to stop operating.

Also, even if the pump is operated within the ambient temperature range,

if the pump is operated immediately after being moved from an environment with an ambient temperature lower than 5ºC, seizing may occur.

After moving the pump from a cold environment to one within the ambient temperature range, please allow enough time for the pump to warm up to the new ambient temperature while it is stopped.

For your reference, the following graph shows the temperature change when a pump that has internal parts below -5ºC is moved to room temperature (25ºC).

Use graph as a standard for temperature change.

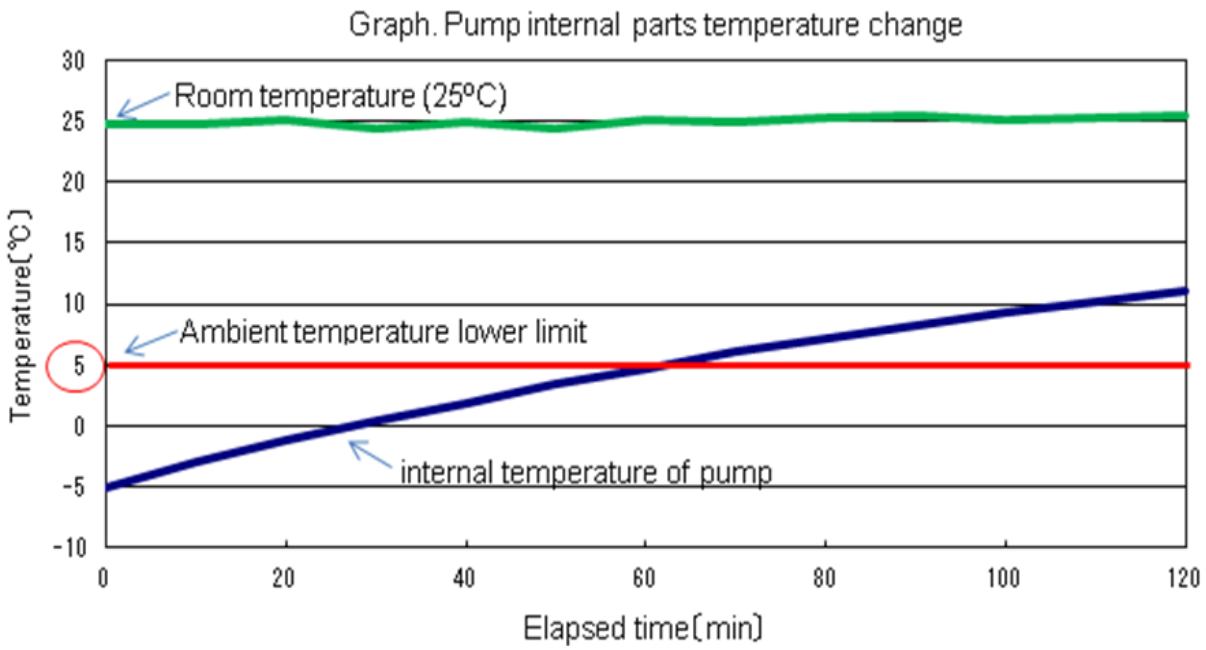

CONTENTS

List of Figures and Tables

1. For Your Safety Use

1.1 This Product Intrinsic Hazardous Nature and Safety Measures

1.1.1 Danger　Leakage of dangerous gas and dangerous materials

Factors	Avoidance methods and measures
  Leakage of poisonous and combustible gas	Exhaust gas such has toxic and combustible, burn ability, corrosion, explosiveness is very danger. Do not exhaust gas with these properties.
Getting injured on touching any toxic pump oil, pump, generated material or sucked substance at the occasion of check or disposal.	(1) When you check the pump, please wear a brace that supports the toxic substances that exhaust the pump.
	(2) To overhaul or dispose, ask the special agency to do the detoxification process.
	(3) Ask the disposal agency licensed by the administration for disposal.
 Getting injured by explosion or fire, due to residual gas or deposition.	It is very danger if introduce combustible gas, burnability gas or explosiveness gas into pump, It has the potential of explosion or fire, due to residual gas or deposition when after stopping as ell as during operation . Do not exhaust gas with these properties

1.1.2 Warning　Transfer of heavy material

Factors	Avoidance methods and measures
 Getting injured on transferring the pump.	(1) Only technically entitled person should be in charge of loading/unloading and operating machines.
	(2) There is a risk that the Pump might drop or lay down when attempted unreasonable operation or machinery setup was not sufficient. You are strictly restricted from entering beneath the Pump.

1.1.3 Warning　Electric shock

Factors	Avoidance methods and measures
 Getting electrical shock on touching the current-carrying.	(1) Be sure to cut the electricity to do electrical connection. Never fail to take the grounding.
	(2) Do not remove the pump cover.
	(3) Be sure to cut the electricity to do checking or installation.
	(4) Never attempt to put in the hand or bar into the opening of the ventilation.

1.1.4 Caution　High temperature

Factors	Avoidance methods and measures
 Getting burnt on touching the high temperature part.	(1) Do not touch the Motor, vacuum pump or piping because has their temperature get very high during operation.
	(2) Do not touch, open the pump cover because the motor, pump or pipe because their temperature remains very hot after having stopped operation.

1.2 Safety Data Sheet（SDS）

IMPORTANT	**Chemical material used for this Pump;** **Pump oil: BARRIERTA J100 FLUIDE E (NOK KLUBER)** **The Safety Data Sheet introduces the chemical material potential to use or touch on operating this machine. Please contact our Sales or vendor division if you are in need.** **Read it with attention to acknowledge the toxic characteristics described on the SDS.** **Please contact us separately if you want to use any chemical material (Vacuum pump oil) other than described on this instruction.**

⚠ **CAUTION**	**SDS is posted as referential to ensure safe operation of the hazardous and/or toxic chemical material. Any person in charge of operating the Pump oil shall be requested to be responsible to cause means appropriate to actual operation of the machine referring to it. Note that the SDS itself shall be never a safety certificate in any manner.**

2. Introduction

2.1 General Features

RDA-281H,RDA-501H are dry vacuum pump unite which consists of a main vacuum pump and an auxiliary pump. The main vacuum pump is the multiple dry vacuum pump which composed of roots rotors connected in series. The roots type vacuum pump composed of each stage pump portion transfer gas from inlet side to exhaust side by rotating two rotors in the casing keeping slight clearance between inner wall of casing and rotors and rotor and rotor. Any oil is not required in the gas passage because the rotors rotate by non-contact and it realizes clean vacuum without contamination by dust.

Features

*** Air-cooled type**

The pump does not require cooling water. You can place and use it anywhere easily.

*** Capability of handling liquid**

The pump has strong configuration to handle liquid carrying over in the process and a rust proof coating is applied on the pump rotors as a standard. Also the pump has flush-air mechanism which introducing room air or N2 gas to blow off liquid or dust accumulated in the last stage of the vacuum pump.

*** Clean vacuum**

The pump is sealant free, therefore there is no contamination of the cooling fluid or seal fluid with the process gases. There is no carryover of the cooling fluid to the exhaust like a liquid ring vacuum pump has.

*** Light weight and compact design**

The pump is light weight and compact design made by aluminum alloy as a main material.

*** Low noise and low level vibration**

Noise and vibration levels are extremely low. As the rotors are dynamically balanced, noise and vibration are minimized. It is equipped with built-in silencer to eliminate discharge noise. The pump is designed for continuous operation with prolonged periodical maintenance.

2.2 Basic Construction

RDA-H series dry vacuum pump, comprises a rotary type multi stage vacuum pump and are provided with a built-in discharge silencer in the compact package.

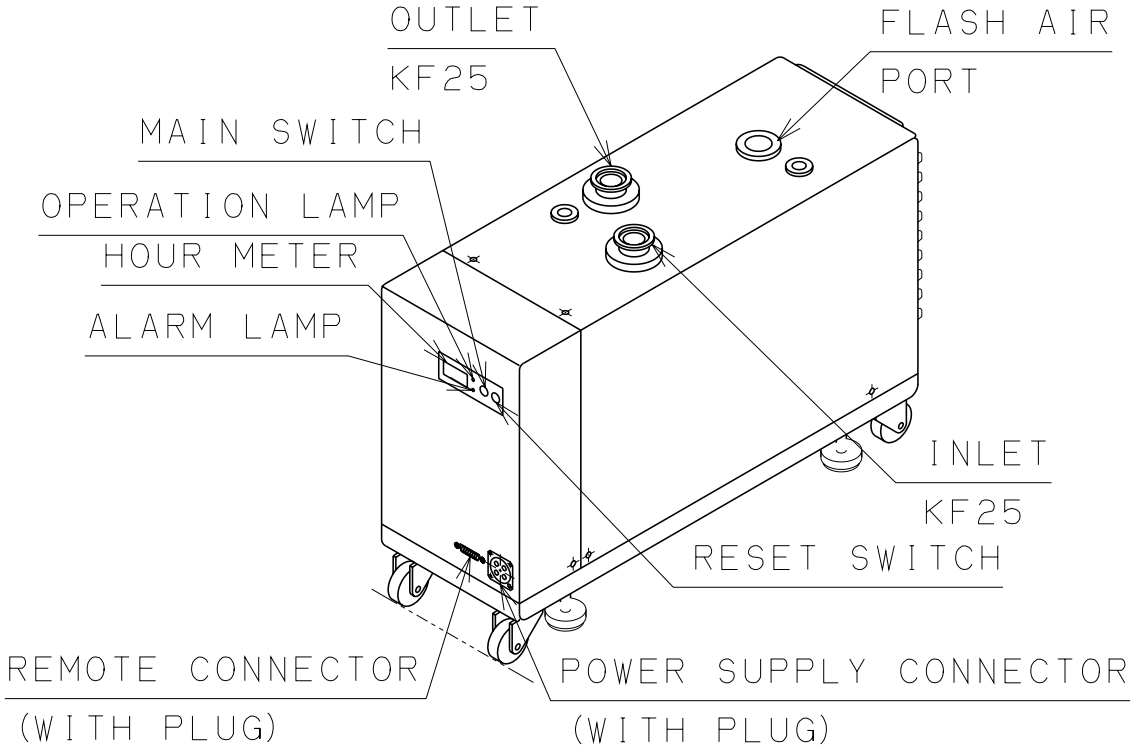

【 Fig.1 】 Basic Construction View

- Inlet : Suction KF25 Flange
  - ✧ The strainer is attached as a standard accessory at the inlet port.
- Outlet : Discharge KF25 Flange
  - ✧ The discharge silencer is incorporated in the enclosure.
- Flush Air Port : For liquid vapor handling applications, supply flush air or N_2 gas.
- Main Switch : Start / stop switch for the pump
- Reset Switch : Alarm reset for the pump
  (It can not be reset when there is an operation signal)
- Operation Lamp : Light in operation
- Alarm Lamp : Light in pump error
- Hour Meter : Accumulated operating hours
  (Display driver error code when alarm occurs)
- Power Supply Connector : Metal connector for power supply
- Remote Connector : D-sub connector (15-pin) for remote signal.
- Guard : Prevent contact with power supply connector
- Screw (2 places) : For guard

2.3 Outline Drawing (unit: mm)

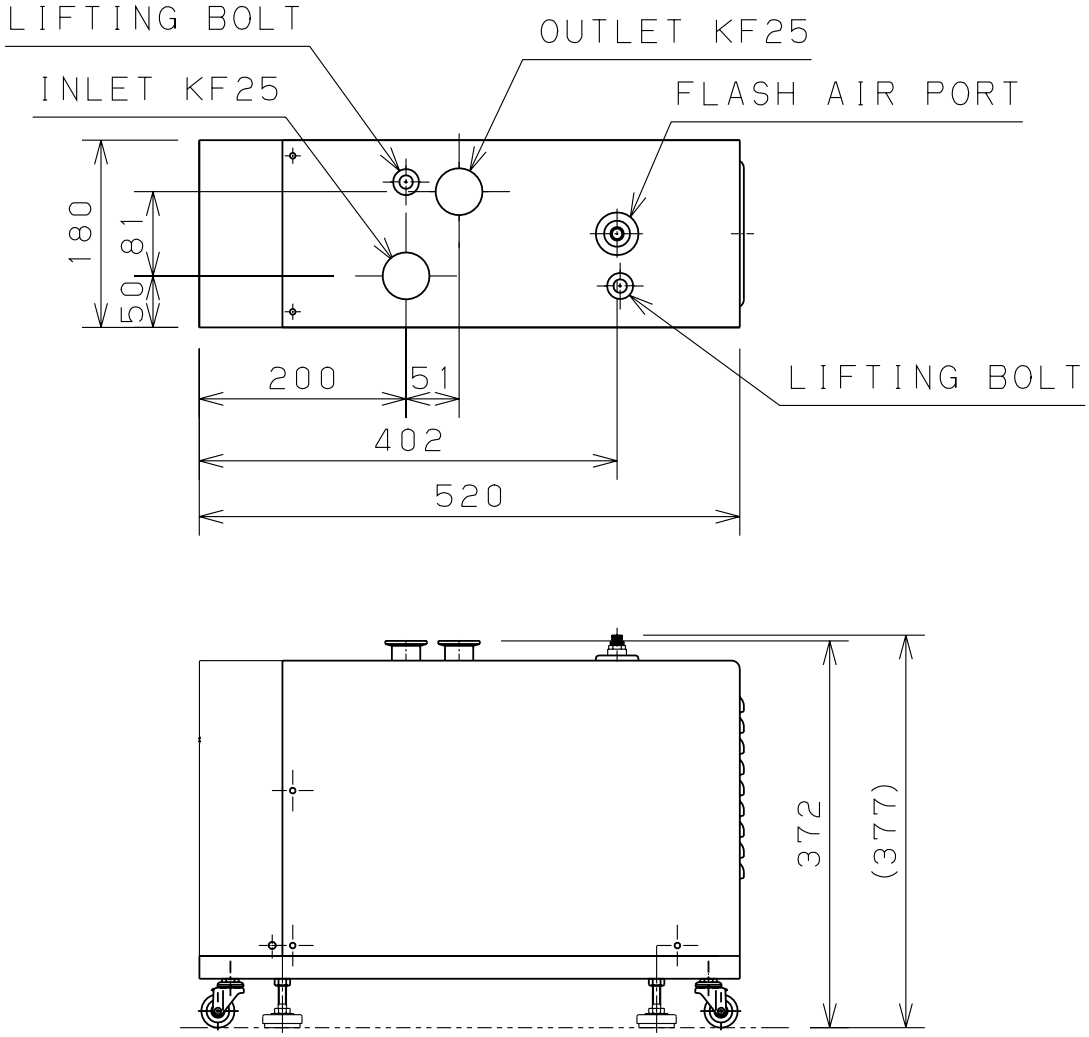

【 Fig. 2 】 Outline Drawing Weight : 38Kg

3. Specifications

3.1 Performance Specifications

【Table 2】 Specifications

	Unit	RDA-281H	RDA-501H
Pumping speed	L / min	280	500
Ultimate press. (W/O. Flash-air .)	Pa	≦0.08	≦0.08
Ultimate press. (W. Flash-air.)	Pa	≦6	≦6
Max. Suction press.	——	the pressure of the atmosphere	
Max. Discharge press.	——	the pressure of the atmosphere	
Max. water vapor ※1	g/hr	≦300 (W. Flash-air)	
Ambient operating temperature	℃	5 ～ 40	
Noise (reference value)	dB (A)	≦56 at 1m	
Motor	W	720 + 10	
Power supply	——	Single Phase 100-115V 50/60 Hz Single/ 3 Phase 200-240V 50/60 Hz	
Power consumption (at ultimate pressure)	W	300	300
Overall dimension	mm	520 (L）X 180 (W) X 377 (H)	
Weight	kg	38	
Note	——	Silencer Incorporated	

※1See 4.4 Flash Air Port if intake air contains moisture.

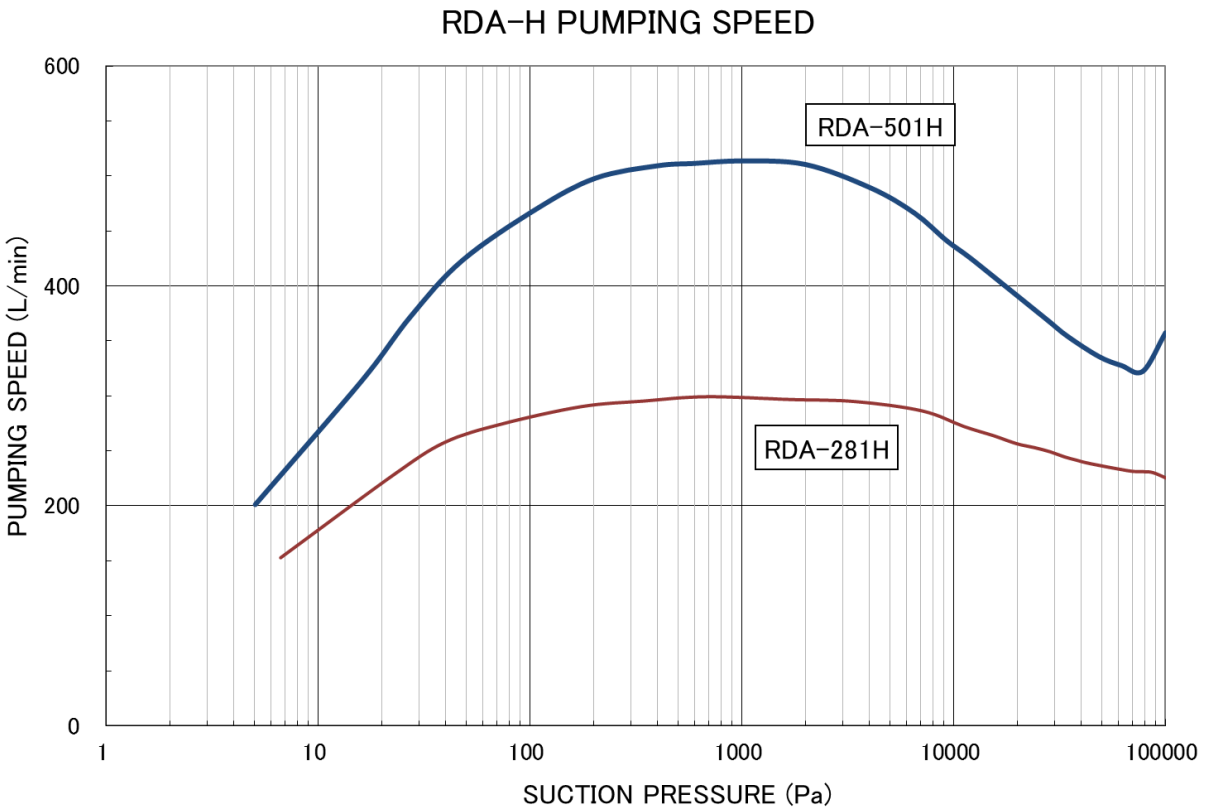

4. Installation

WARNING

(1) You are requested to install and operate the product in compliance with the laws and regulations relating to the safety, e.g. Fire Defense Law, Electric wiring regulation and so on in the country and region you use the product. Consequently you shall be requested to attend general safety lectures officially effective in the area, such as electrical safety, Cargo handling safety and so on. Note that any person not attended such lectures shall be restricted from handling the product. Operators shall need to attend such kind of training and have special knowledge, skill and title regarding the electricity, machinery, cargo, vacuum and so on.

(2) Be sure to clear any energy sources, e.g. electricity, coolant and so on of the product before installing or removing the product.

4.1 Transportation

The pump must not be turned down sideways. When it is lifted with a chain block or a crane, use eyebolt (attached) having a sufficient strength on the lifting part as shown in Fig.3. The eyebolts must be screwed manually tightened by hand. Do not lift the pump by picking up the suction or discharge pipe ends connected to the pump.

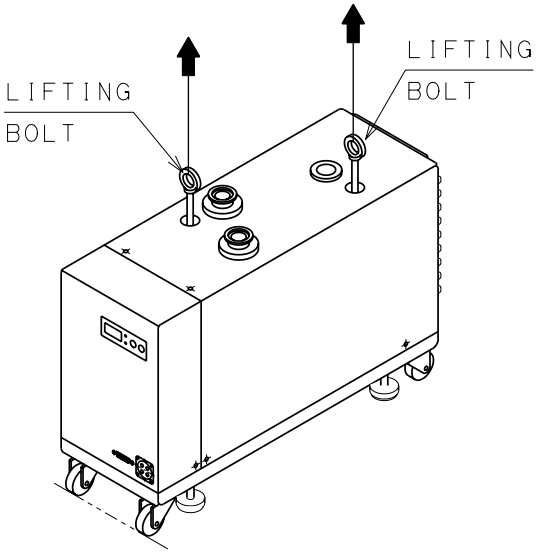

Weight : 38 kg

【 Fig.3 】 Pump lifting method

WARNING

(1) Although this pump is provided with casters, do not move it a long distance using these casters.

(2) Weight of this product is as follows.

RDA-281H,RDA-501H : 38 kg

You have a risk of giving damage to your back as the load larger than safety standard shall be required to transfer the product. Be sure to use the loading machinery (such as mobile crane) to lift up the Pump or load it on the pallet and fix it with Jack and run the Pallet truck for its transfer.

4.2 Installation

1) The pump shall be installed in the place of firm floor in horizontal level. The desk top or floor surface should be sufficiently strong to bear the pump weight.
2) The pump contents its lube oil when dispatched from the factory, therefore Do not tilt the pump more than 10 degrees in each direction while transportation and installation to avoid oil leakage into the casing/rotor side.
3) It will be convenient to use a hoist, chain block hooks etc. which facilitate moving the pump.
4) Minimum 30cm space behind the lubber of the pump shall be kept to have cooling air flow from the lubber of the pump casing.
5) The room temperature shall be 5 to 40 ℃ for the pump. It is recommendable to have a ventilation fan if the pump uses in the small room.

WARNING

Do not install directly on the ground by removing the casters. Ventilation openings under the pump are blocked, you have a risk of getting burned or fire

CAUTION

Do not give the Pump a shock or lay it down. It might impair the Pump operation. Set it in a horizontal position keeping inlet flange upward.

CAUTION

If have been kept at a temperature lower than the ambient temperature is operable, please drive temperature of the pump body from the Ambient temperature and humidity for operation.

4.3 Suction and Discharge Piping

1) Precautions in Suction Piping
   a) The suction piping should be connected with “O” ring for KF25 and clamped right after removing the flange cover to prevent any dust comes into casing.
   b) A “main valve” (Isolation valve) should be provided between the pump and the chamber or equipment to be isolated if the reverse flow of the atmospheric air or the handling gas when the pump is stopped.
   c) A “vacuum release valve” should be provided in the suction piping near the suction port of the pump. It can be used to flush out gas in the casing or flush dry air to dry inside of the pump before turn off the pump. Refer Fig. 4
   d) If there is a possibility of an amount of water or particle flows into the pump, a knock-out tank should be furnished in the suction piping line.

CAUTION

(1) Should the Pump sucked the water or substance such as dust, powder and so on, it would impair the ultimate pressure and further cause a trouble.
(2) Metal mesh on the Suction inlet is put to keep large foreign substances such as bolt away from the Pump unit. Be sure not to take it off unless necessitated so to check it. Contact the nearby service station when if drop foreign substance (ex. bolt) into the inlet at the pump, and if suction of foreign substance (ex. solid or powder smaller than metal mesh), since it is necessary to disassemble the pump to remove. May the pump stops when driving as it is.
(3) Be careful not to damage O-ring seat surface. Do leak test of the entire system after assembly of the piping. (Do not pressurize greater than 30kPaG to the pump)

2) Precautions in Discharge Piping

The pump discharge line or piping itself should not have excessive back pressure (piping resistance). If the back pressure rises high, the pumping speed will slow down and finally it will cause motor overload. The back pressure should not exceed more than atmosphere pressure.

CAUTION

Do not run the Pump on blocking the exhaust outlet or putting any device that might hamper gas passage onto the outlet. There is a risk that the pressure inside the vacuum pump rises up and it causes break or oil leak of the casing or oil level gauge resulting in overload of the motor.

CAUTION

(1) Be sure to use electricity-conducting material for the duct piping. Should you used non electricity-conducting material, static electricity would be generated under passage of exhaust gas, generate the charged spark and cause a fire.
(2) In the case of the process flowing combustible gas/susceptibility of substances to burn gas, you are requested to introduce the dilution gas. Flow the dilution gas from the intake side so that the gas concentration to be exhausted becomes lower than the explosion limit.
(3) If thin metal piping, bellows or the likes are used, the pulsing stream of gas in piping may produce pipe resonance, and the sound could exceed the work environment sound criteria if the piping, bellows or the like are made with thin metal wall. Use piping with adequate thickness and pressure proof.
(4) Make sure that condensed gas will not return directly to the pump by exhaust piping connection like in L-shape at the bending sideway. If you are installing a silencer and/or etc, it may cause a damage to the pump by condensed gas which flow back from the silencer. To prevent this problem it is recommended to add a discharging mechanism of collected liquid.

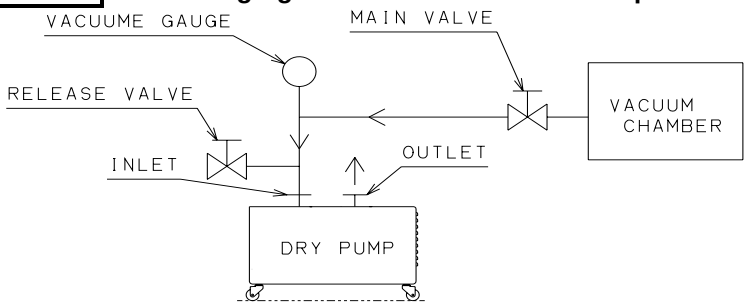

【 Fig. 4 】 Typical Pump Layout

4.4 Flush Air Port Arrangement

The pump has flush-air mechanism which introducing room air or N_2 gas to blow-off liquid or dust accumulated in the last stage during the pump operation.

CAUTION

It may shorten the pump life when the volume of vapor water beyond the processing capacity of the pump, even using Flush Air. As a rough indication of pump vapor water venting capacity, use the next values. RDA-281H,RDA-501H:300g/hr

1) How to Introduce Room Air

If the gas entering the pump contains moisture, turn the needle in the flash air port to the top, lock in place with the lock nut, and commence operation while drawing in atmospheric air. Moisture may be introduced at a rate of 300g/hr or less.

If moisture is not to be introduced, lower the needle and commence operation.

Operate the flash air port with the pump stopped, and after verifying that the pump has cooled.

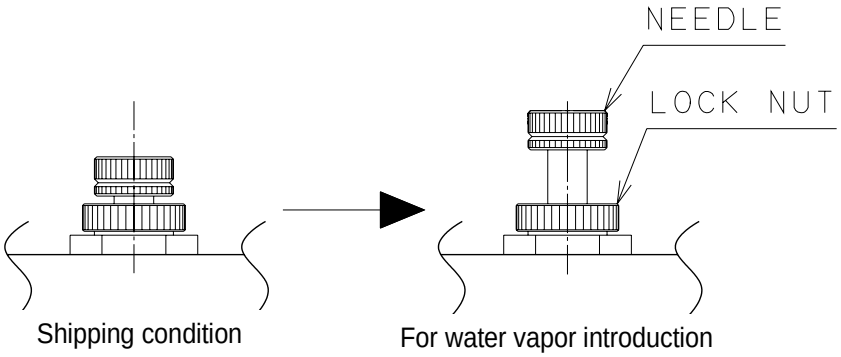

【 Fig.5 】 Needle Valve

WARNING

The surface temperature of the inlet / outlet, and port needle valve may exceed 60ºC in operation. Operate the piping and the flash air port with the pump stopped, and after verifying that the pump has cooled.
Use appropriate protection to avoid direct contact with these surfaces.

2) How to Introduce N_2 Purge

If nitrogen gas purge is required, remove a plug of flush air port, mount the 1/4 inch tube fitting (ISO PT1/4 screw) on the flush air port. The supply pressure of N_2 gas shall be **50 kPaG** and nitrogen gas shall be supplied **10 ～ 20 SLM**.

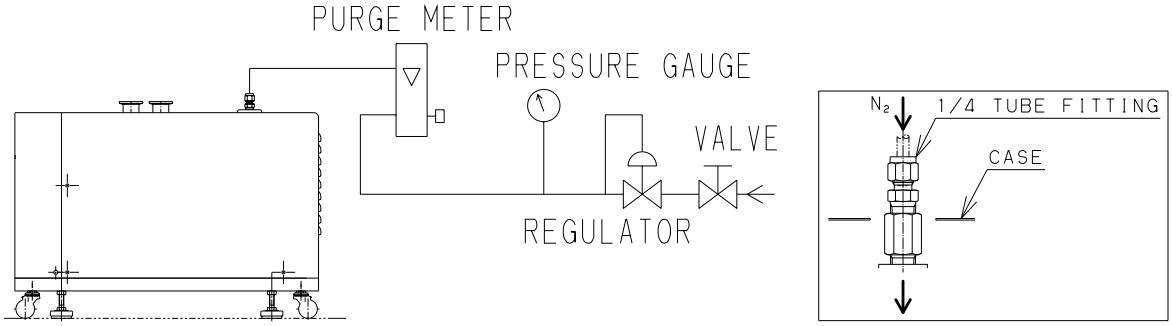

【 Fig.6 】 N_2 Purge Arrangement

CAUTION

(1) Add pressure reducing valve for adjusting the pressure of the nitrogen gas supply and supplying valve to stop N_2 supply.
(2) Before removing nitrogen gas piping, close supply valve for nitrogen gas.

4.5 Electrical Wiring

WARNING

Install and operate this pump in compliance with the laws and regulations relating to the safety, e.g. Fire Defense Law, Electric wiring regulation and so on. In the country and region you use the product.

WARNING

(1) Turn OFF the Power Supply to do the electrical connection. Never try to work on it on keeping the electricity turned ON.
(2) Make sure to have the steady grounding. You have a risk of getting electrical shock when the machine caused a failure or electrical leakage.
(3) Do not use it excluding the voltage rating of the motor. It causes damaging by a fire and a fire of the motor.

IMPORTANT

This product cannot start when a remote connector attached to is not mounted even if this product is not operated in remoteness.
Please mount a remote connector on the part of the remote connector of the fig.1 by all means even if this product is not operated in remoteness.
(The wiring of the signal line to a remote connector is unnecessary.)

1) Wiring of Power Supply

a) The electric power source for this pump is Single phase 100-115V, Single phase 200-240V, or 3-phase 200-240V, (50/60Hz).

b) The electric power capacity should be more than 1.5kVA. Place a MCCB (Molded Case Circuit Breaker) in supply end. Rated current of the MCCB is shown in following table.

3-phase, 200-240V	Single phase 200-240V	Single phase 100-115V
5 A	5 A	10 A

c) To supply power, solder the power cables to the pins of attached power supply connector referring following table. This cable shall be AWG#14 (2mm^2).

Connector Pin No.	3-phase Power Cable	Single phase Power Cable
X	R	L
Y	S	N
Z	T	No use
G	E (Grounding)	E (Grounding)

WARNING

(1) Use supplied connectors only. If other connectors are used, first ground contact may fail, and it causes possibility of electrical shocks.
(2) Use appropriate insulated wire, which can tolerate rated current value of previous page for power cord.
(3) Do not perform insulation resistance tester.

2) Remote control can be arranged.

a) If the pump is required a remote control, connect the signal line and the pins of attached remote connector with solder. The specific remote connector are stated in the below table.

b) A voltage of 12VDC is applied to the input system on the pump side. Prepare a no-voltage contact.

c) The pump side of the output is a no-voltage contact. Use the signal voltage within DC28V/1A.

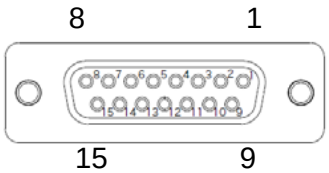

Pin assignment				
No.	I/O	Item	Specification	
1		N.C.		
2		N.C.		
3		N.C.		
4	OUT	Start check	CLOSE : At stop	OPEN : Running
5	OUT	Start check	CLOSE : Running	OPEN : At stop
6	OUT	OUT COM		
7	IN	Pump start	CLOSE : Run	OPEN : Stop
8	IN	IN COM		
9		N.C.		
10		N.C.		
11		N.C.		
12	OUT	Alarm	CLOSE : Alarm	OPEN : Normal
13	OUT	Alarm	CLOSE : Normal	OPEN : Alarm
14		N.C.		
15	IN	Alarm reset	CLOSE:Reset	

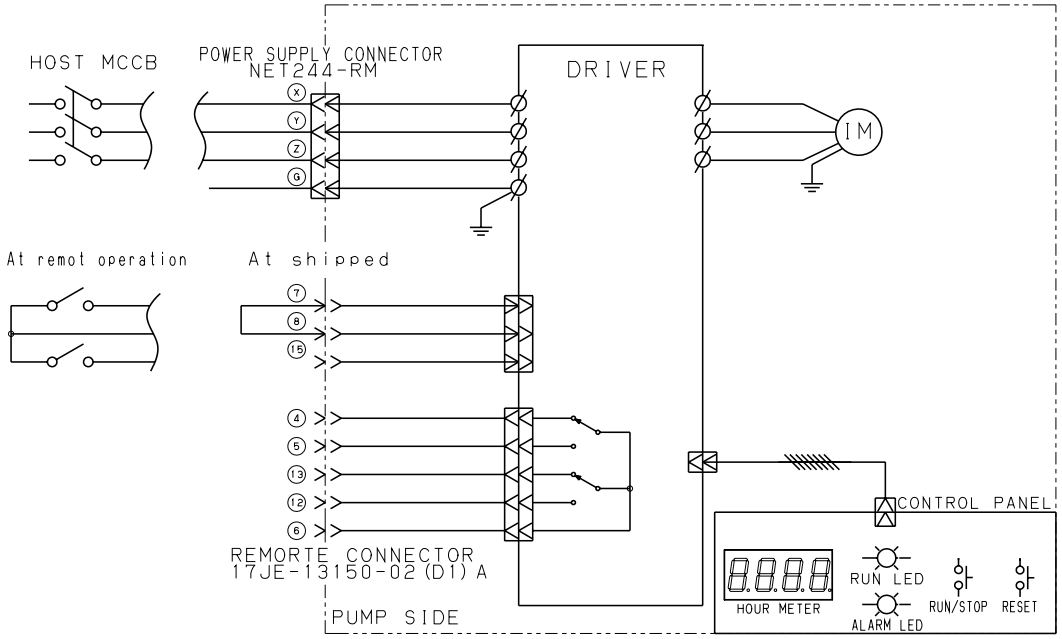

【 Fig.7 】 Electrical Wiring Diagram

5. Operation

5.1 Check points and Preparations before Operation

1) The valve in the discharge side piping line should be fully opened.
2) The main valve should be operated smoothly. After checking the valve operation, the main valve should be fully closed.
3) Confirm the conditions once again in accordance with the pre-starting check points of table 3.

【Table 3】Pre-starting check points

Step	Item	Confirm
1	Installation and piping connections have been completed.	
2	The power supply meets the pump power supply specification.	
3	A remote connector is mounted. (Even if this product is not operated in remoteness, a remote connector is necessary.)	
4	The valve in the discharge side piping line should be fully opened.	
5	The main valve (Isolation valve) should be closed.	

WARNING

(1) Please check that the connection piping and wiring has been completed.
(2) Never run the Pump on blocking up the exhaust outlet, putting any device that hampers the gas passage. There is a risk that the pressure inside the vacuum pump rises up and it causes break or oil leak of the casing or oil level gauge resulting in overload of the motor.
(3) If any valve was put to a pipe after the exhaust outlet, check and ensure that it is open.

DANGER

Use of the toxic, combustible or combustion susceptible gas other than inactive gas is not allowed as there is a risk of leakage of the gas from the Pump unit if it was exhausted by the vacuum pump.

DANGER

Use of the toxic, combustible or combustion susceptible gas and substance other than inactive gas is not allowed as there is a risk of causing fire or explosion inside the Pump unit if it was exhausted by the vacuum pump.

DANGER

The pump body and oil also become toxic if toxic gas has been sucked into the vacuum pump. Note at the time of maintenance.

WARNING

Do not open pump cover during operation. Do not touch the motor, vacuum pump or piping because their temperature get very high. You have a risk of getting burned if a part of your body touched it.

CAUTION

(1) Before performing process, pump must be warm-up and degassing operation (by inlet port at atmospheric pressure) should be performed at the end before process stop. An insufficient warm-up at the initial start-up, and/or insufficient degassing of condensable gas interior of the pump at the end of process may cause a pump life shortening.
(2) Recommended to have a continuous operation without stopping pump.

5.2 Starting

After completion of the check points and preparations before operation, start the pump according to the following procedure.

1) Supply electric power.
2) Turn on the Main switch. (Refer Fig.1) In case of the remote control, make the start signal after turning on the main switch. (Refer Fig.1) The dry vacuum pump, auxiliary pump and cooling fan starts and the operation lamp lights up. The pump rotation reaches a steady speed within approx. 15 seconds.

5.3 Check points and Adjustments after Starting

After the pump is stared up, check the following points.

1) Check if abnormal vibration or noises on the pump case.
2) In case of N_2 gas purge is arranged, please supply N_2 gas carefully. (Refer page 8)
3) Open the main valve gradually.

Starting procedure

Reference items number in the previous page.	Starting steps
5.1. 1)	Confirmation of no resistance material and no blocking in discharge line
5.1. 3)	Check and confirm Pre-starting check points
5.2	Power supply Start
5.3	Check points after starting Normal noise / vibration → Open main Valve

5.4 Stopping

To stop the pump, proceed as follows.

1) In order to prevent the back (reverse) flow of the atmospheric air or the handling gas, fully close the main (isolation) valve in the suction line.
2) If the handling gas contains condensable gas or water vapor, the pump inside has to be dried. Please open the “Vacuum release valve” to introduce inert gas (atmospheric air), then continue to operate the pump for about 5 minutes.
3) Turn off the main switch. In case of the remote control, turn off the start signal. The dry vacuum pump and auxiliary pump stops and the operation lamp turns off. Then, cooling fan will stop after 10 minutes.
4) Turn off the electric power supply.

Stopping procedure

Reference item Number	**Stopping Steps**
In the previous page.	
5.4. 1)	**Close main valve**
5.4. 2)	**Open vacuum release valve open**
5.4. 2)	**Continue to operate the pump for drying.**
5.4 3)	**Tune off main switch (Cut off the starting signal)**
	Tune off power supply

If the pump stopped with abnormal situations listed as follows, **do not start the pump again automatically for safety.** The cause of failure has to be resolved.

For the mechanical problems of abnormal stop, please refer to [Table 5]. Also, refer to the driver error code [Table 6] for the electrical matters such as the breakdown of the driver.

CAUTION **When the pump is stopped for a long time, turn off power by certainly turning off breaker.**

6. Check and Maintenance

6.1 Periodical Checks

To maintain the vacuum pump in the good operating conditions, monitor the checking points and provide maintenance in accordance with the following table.

【Table 4】 Periodical check list

Interval	Item
Daily	Check if any abnormal sounds
	Check suction and discharge pressure.
Monthly	Check motor current and voltage.
	Clean the inlet strainer.
Minor maintenance at 2 years. Major maintenance every 2 years thereafter, repeat minor maintenance.	Periodic overhaul (disassembly and cleaning, replace with standard parts, replace lubricating oil) [CS]

Mark [CS] : Contact the service center or sales dept.

1) The interval and check points shown in the Table 4 refer as the case of standard service. It should be adjustable depending on your handling gas, seriousness of contamination if any, the pump operating hours, the frequency of pump start stop, etc.
2) The disassembly, checking, cleaning, replacement of parts and periodical maintenance should be conducted by the manufacturer or authorized service workshop. For the maintenance, the manufacturer requires information of handling gas, the operating conditions of the pump, etc.

WARNING

We would be obliged to refrain from handling and/or executing maintenance of the product if the detail of used hazardous substance was not disclosed or the product has exhausted such substance that the detoxification process is hardly conducted.

6.2 Trouble shooting

In the event that a trouble occurs on the vacuum pump while it is in operation, conduct check points and remedies with references of the Table 5.

Since the driver error code is displayed in the hour meter when the alarm lamp lights up 6.3 Diagnose the fault according to Table 6 of the driver error code.

【Table 5】 Troubleshooting

Trouble	Item	Probable Cause	Check and Remedy
Pump fails to start	1	Power comes in none of three phases.	Check power source.
	2	Source voltage is low.	Measure voltage
	3	An attached remote connector is not mounted.	Mount an attached remote connector. (Even if this product is not operated in remoteness, mount a remote connector.)
	4	Remote connector is disconnected.	Connect remote connector
	5	Clogging discharge-piping line.	Check discharge piping line
	6	Closed valve of discharge piping system.	Open valve in discharge
The alarm lamp is lit, and the pump is stopped, or won't start.	7	Damaged bearings, gears or similar due to lack of lubrication.	Replace failed parts. [CS]
	8	Existence of attached or foreign substances in the pump.	Disassemble and clean. [CS] Check pump inside removing housing cover plate.
	9	Internal contact due to abnormal internal clearance.	Ditto. [CS]
	10	Defective motor or motor driver.	Repair or replace motor. [CS]
Pressure fails to higher. Pumping speed is low.	11	Equipment or suction piping system leakage.	Check for leak of equipment or from piping and joints.
	12	Equipment, suction piping system has a gas generation source.	Remove the gas generation source.
	13	Clogging of suction piping system.	Clean suction piping system.
	14	Clogging of discharge piping line.	Refer to above item 4 & 5.
	15	Damage to the auxiliary pump	Replace the auxiliary pump. [CS]
Abnormal sound generation.	16	Existence of attached or foreign substances in the pump.	Refer to above item 7.
	17	Too much flow of condensation in the pump.	Provide a drain separator in the suction piping.
	18	Damaged bearings, gears or similar due to lack of lubrication.	Refer to item 6. [CS]
	19	Internal contact due to abnormal internal clearance.	Refer to item 8. [CS]

Mark [CS] : Contact to service center or manufacturer.

6.3 Driver error code

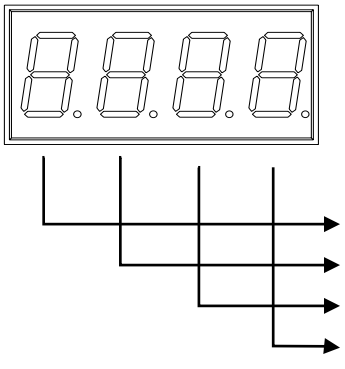

The cause of the protection operation is indicated by four times in the hour meter.
The latest error code is on the left side,
The oldest error code is displayed on the right side.
To cancel the error, please push the reset switch after removing the operation signal.

【Table 6】 Driver error code

Error code	Name	Probable Cause	Check and Remedy
1	Overload at Starting	Damaged bearings, gears or similar due to lack of lubrication. Existence of attached or foreign substances in the pump. Internal contact due to abnormal internal clearance. Defective motor or motor driver.	Replace failed parts. [CS] Disassemble and clean. [CS] Overhaul of pump. [CS] Repair or replace motor. [CS]
2	Overload		
3	Controller overheating	High ambient temperature Failure of the cooling fan or clogging	Check ventilation Fan operation check
4	Motor overheating	High ambient temperature Failure of the cooling fan or clogging	Check ventilation Fan operation check
5	DC bus overvoltage	Power supply out of range Driver failure	Check input power Repair of the driver [CS]
6	DC bus low voltage		
7	Restriction	Damaged bearings, gears or similar due to lack of lubrication. Existence of attached or foreign substances in the pump. Internal contact due to abnormal internal clearance. Defective motor or motor driver.	Replace failed parts. [CS] Disassemble and clean. [CS] Overhaul of pump. [CS] Repair or replace motor. [CS]
8	large Disturbance	After a stop command, The motor doesn't stop due to external factors	Check discharge piping line
9	IPM Overload	Damaged bearings, gears or similar due to lack of lubrication. Existence of attached or foreign substances in the pump. Internal contact due to abnormal internal clearance. Defective motor or motor driver.	Replace failed parts. [CS] Disassemble and clean. [CS] Overhaul of pump. [CS] Repair or replace motor. [CS]

Mark [CS]: Contact to service center or manufacturer.

7. Disposal

Make sure to keep in compliance with the laws and regulations established by the local governments to dispose the Vacuum pump. You should ask the dedicated disposal agency for the disposal particularly if the Pump has exhausted any toxic gas. Note that you are requested to bear the cost and charges relating to the disposal.

CAUTION

(1) You should ask a special disposal agency for the disposal particularly if the Pump has exhausted any toxic gas hazardous to the human body. The Pump oil as well as the Pump main body gets hazardous.

(2) Follow the description "Caution on disposal" of Safety Data Sheet to dispose the Pump.

8. WARRANTY

(1) The warranty for this pump extends for a period of one year from the date of shipment.

(2) Any malfunctions or defects which occur under normal usage conditions during the warranty period will be repaired free of charge.

Normal usage conditions refer to the following:

a) Ambient temperature and humidity during operation: 5- 40°C, below 80% RH

b) Operation in accordance with the user manual

(3) Repair fees will incur during the warranty period for the following cases:

a) Malfunctions due to a natural disaster or fire.

b) Malfunctions caused by special atmospheric conditions, such as salt damage, inflammable gas, corrosive gas, radiation or pollution.

c) Malfunctions caused by usage conditions that differ from those stated in the user manual (performance specifications, maintenance and inspection, etc.).

d) Malfunctions caused by modifications or repairs carried out by a party other than the manufacturer, or by a service company not approved by the manufacturer.

e) Malfunctions caused by noise (electric disturbance).

f) Malfunctions that occur when not using a rated power supply.

g) Malfunctions that occur when there is an abnormal rise in internal pressure due to the pump exhaust outlet being blocked during operation, etc.

h) Malfunctions that occur, when the pump is damaged as a result of being dropped or falling, etc.

i) Malfunctions which are determined by the manufacturer’s technical personnel to be caused by conditions that do not comply with the usage conditions for this vacuum pump.

j) Malfunctions due to the replacement of consumables.

We shall not be liable for any malfunctions of our products caused by the customer, regardless if the malfunction does not fall within the warranty period, nor shall we be liable for any loss of opportunity for the customer’s clients or for compensation for any damages to other products, labor costs, production loss, transportation expenses and other related work.

Excludes the application of warranty for failure and maintenance inevitably occurring when used for exhausting special gases such as acids, alkalis, corrosive gases, flammable gases, etc. and solid and condensable substances.

Note, the warranty stated here is an individual warranty covering the pump. In addition, the scope of the warranty coverage concerning repairs is limited to the repair and/or replacement of parts.

If such other company or individual has performed a repair, we will not undertake any responsibility.

In the event of failure or abnormality, contact our sales department or service department immediately.

Usage Status Check Sheet (for use in Operation Manual)

* For the purpose of safety control of repair personnel, fill in within the heavy line frame and attach the sheet to the item of which repair is requested.
* In case this sheet were not attached or filled in, your request of repair and service may not be accepted.
* In accordance with the Private Information Protection Law, the provided information will be used only for determining the cause of failure and whether detoxifying washing should be conducted. It will never be provided to any third person.

Model Name: _____ Manufacturer's Serial No.:_____

1. Inhaled Gas * Please be sure to fill in.

(1) Whether there is harmful effect on human bodies Yes No (Sing your name below.)

(2) Whether there is unusual smell Yes No

(3) Type and Name of Gas:_____

* Industrial Safety and Health Law designates particular substances as the materials to be notified.

2. Usage Status

Operation Method: Approx. ( ) hours per day, ( ) years and ( ) months

☐ Continuous Operation ☐ Intermittent Operation

Usage:_____

3. Failure Status ☐Unusual Noise ☐Abnormal Pressure ☐Abnormal Actuation ☐Oil Leakage Other Symptoms:_____

4. Detail of Request ☐Repair (Overhaul) ☐Regular Checks

5. Others:_____

Company Name: Personnel in charge:

Address:

Tel: Fax: E-mail:

Agent Name; Personnel in charge:

Address:

Tel: Fax:

* In case you do not have any direct transaction with us, please be sure to fill in the agent name.

6. Confirmation

The gas and substance used in this pump or unit is harmless to human bodies, or it is not contaminated by any substance harmful to human bodies.

Signed: _____ (seal) Date: _____

* In order to avoid a trouble during transportation, please evacuate oil from any oil pump before shipping.
* You are requested to ship the package to our Service Division (CS Center). (See the attached list of addresses.)