SK00-9656-EI-003-12

ULVAC

G-TRAN Series
Multi-Ionization gauge Sensor Unit
Standard Type Model SH2-1
Serial Communications Type Model SH2-2
Instruction Manual

(OPTION)

(OPTION)

(OPTION)

This manual is for this unit units of the following serial numbers:
SH2-1: S/N 06001 and higher.
SH2-2: S/N 03001 and higher.

Read this manual before operation and keep it at hand for immediate reference.

Components Division,
ULVAC, Inc.
http://www.ulvac.co.jp/

Prior to Use

Thank you for purchasing this ULVAC product.
Upon receipt of the product, verify that is the correct model ordered and that it has not been damaged during transport.

WARNING	Read this instruction manual before installing, operating, inspecting, or maintaining the product and fully understand the safety precautions, specifications and operating procedures regarding the product.
WARNING	The copyright of this instruction manual is held by ULVAC, Inc. You are prohibited from copying any portion of this instruction manual without the consent of ULVAC Inc. You are also prohibited from disclosing or transferring this instruction manual to third parties without the express written consent of ULVAC Inc.
CAUTION	The contents described in this instruction manual are subject to change without prior notice because of changes in specifications or because of product improvements.

Safety Symbols

WARNING	Safety symbols are used throughout this instruction manual to call the operator's attention to safety. The terminology used in safety symbols is classified below.

DANGER	Indicate status of urgency of danger when failure to comply with DANGER results in serious personal injury or death The work ignoring this warning will lead to serious damage to human life or factory facility (including this equipment) at a high probability.
WARNING	Indicate status of danger when failure to comply with WARNING results in serious worker’s injury or death. The work ignoring this warning will cause possibility leading to serious damage to human life or factory facility (including this equipment)
CAUTION	Indicate status of danger when failure to comply with WARNING results in minor injury or moderate damage. The work ignoring this warning will cause possibility leading to minor damage to worker or breakage to equipment or necessary to adjust.
✔ Note	Direct hazard is not existed, describe the necessity to know from the viewpoint of worker’s safety or correct and safe operation of equipment

Safety Precautions

In order to safely use the G-TRAN Series sensor unit (below, "this unit"), please read the instruction manual and the safety precautions below.

⚠WARNING	**Repair** Request repairs for this unit from the dealer where purchased, from ULVAC Inc., or from the URL listed in this instruction manual.
⚠WARNING	**Power off** If this unit is accidentally damaged, immediately turn off the power supply. There is a risk of fire and electric shock from use in this state.
⚠WARNING	**Power off** If this unit produces unusual heat, smoke, or a strange smell, immediately turn off the power supply. There is a risk of fire from use in this state.
⚠WARNING	**High temperature warning** Do not touch the surface of the gauge head during operation or after operating ends as it reaches high temperatures. There is a risk of burns if touched.
⚠WARNING	**Power supply voltage** Before turning on the power supply, check that this unit operating voltage and the supply power are the same. If the wrong power supply is connected, there is a risk of damage to this unit and to devices connected to this unit and a risk of fire. The overvoltage category is category I.
⚠WARNING	**Power supply lightning surge handling** Please do not connect directly to a DC drive DC power this unit. If the wiring is wrong, there is a risk of damage to this unit and to devices connected to this unit and a risk of fire.
⚠WARNING	**Excessive vacuum chamber pressure** Do not connect this unit in a location where the gauge head's internal pressure exceeds atmospheric pressure. If the gauge head's internal pressure exceeds atmospheric pressure, there is a risk of damage to the gauge head and it may pose a hazard to its surroundings, including to people, by flying off its connector. When exceeding atmospheric pressure, install an isolation valve to ensure that the gauge head's internal pressure does not exceed atmospheric pressure.
⚠WARNING	**Protective grounding** Always connect this unit electrically to a grounded vacuum chamber. Use a conductive metal clamp on the NW flange. If this unit is not correctly connected, it will not only show the wrong pressure, there is a risk of damage to this unit and the equipment connected to this unit and a risk of fire. When this unit is insulated from the vacuum chamber, ground the case section (D-sub connector shell section) with a class D (class 3) ground.
⚠WARNING	**Operating environment** Avoid using this unit in locations with high humidity and condensation or in locations exposed to water. There is a risk of malfunction, ground leakage, and fire if water penetrates inside this unit.

⚠CAUTION	**Operating gas warning** Filament 1 is yttria-coated iridium. If this unit is exposed to chemically active gases such halogen or halogenated gases, problems will occur such as filament breaks or pressure characteristics changing. Filament 2 is tungsten. In atmospheres with a large amount of oxygen, there is a risk of the operating life decreasing from the filament burning out.(The life of Air introduction 1Pa is approximately three hours.) When using this unit in these types of environments, install an isolation valve between this unit and the vacuum chamber and protect this unit as much as possible so it is not exposed to these gases.
⚠CAUTION	**Gas type dependency** The pressure value and accuracy for this unit and SPU differ by the type of gas measured. The accuracy for this unit is based on measuring nitrogen gas. Be careful when using gases other than nitrogen.
⚠CAUTION	**Power off** When replacing the gauge head, always turn off the power supply. Do not turn on the power supply until finished replacing the gauge head. If the gauge head is attached or removed with the power on, there is a risk of damage to this unit and to devices connected to this unit and a risk of fire.
⚠CAUTION	**SAU pressure reading check** Check the SAU atmospheric pressure immediately after use. Adjust the atmospheric pressure as necessary.
⚠CAUTION	**Tolerance of SAU at altitude and atmospheric depression.** The atmospheric and 0 point adjustment is required at the altitude of more than 500m around and at atmospheric depression lower than 950hPa. Without the adjustment, pressure indication will not decrease from 1.2 x 10^{+4}Pa.
⚠CAUTION	**Disassembly prohibited** Do not disassemble this unit. There is a risk of fire and electric shock. If disassembled, sensor operation cannot be guaranteed.
⚠CAUTION	**Modification prohibited** Do not modify this unit. There is a risk of fire and electric shock. If modified, sensor operation cannot be guaranteed.
⚠CAUTION	**Check power supply voltage** Before turning on the power supply, check that this unit operating voltage and the supply voltage polarity are the same. If the wrong power supply is connected, there is a risk of damage to this unit and to devices connected to this unit and a risk of fire.
⚠CAUTION	**Operating power supply** Always connect this unit to a power supply and evaluation unit that conforms to standards (EN61010 SELV-E) for grounded protective extra low voltage. Install a fuse in the connection.
⚠CAUTION	**Voltage supply to this unit** If voltage supplied to this unit is less than DC20V, it does not show accurate pressure. Please confirm supplied voltage to this unit as well as DC power supply voltage.

⚠CAUTION	**Power on** Turn on the power supply after all the equipment, including the gauge head, display, evaluation unit, and cables, has been connected to this unit. If the power is supplied before connecting them, there is a risk of damage to this unit and to devices connected to this unit and a risk of fire. There is also a risk of breaking the filament in the gauge head.
⚠CAUTION	**Operating environment** Use this unit within the environment range defined by the specifications.
⚠CAUTION	**Condensation** Avoid using this unit in locations with high humidity and condensation or in locations exposed to water. There is a risk of malfunction, ground leakage, and fire if water penetrates inside this unit.
⚠CAUTION	**Foreign object insertion** Protect this unit so that metallic and flammable foreign objects cannot enter the interior of this unit from the openings.
⚠CAUTION	**Ensure ventilation** Do not put this unit in a sealed chamber. Always install it in a location that ensures ventilation. If sealed, there is a risk of loss of operating life when the temperature of the electronic components inside the power supply increases.
⚠CAUTION	**Disposal** When disposing of this unit, please follow all local laws and regulations. In particular, if the gauge head was used in an atmosphere that can cause harm to the human body, dispose of it through specialized waste handler. Customers are responsible for expenses related to disposal.
⚠CAUTION	**Setting of set point** Output of set point and pressure signal comes from same terminal. It may cause misreading. When you change set point value while the system is running, please pay attention not to proceed in running mode.
⚠CAUTION	**Set point signal** When set point is set, external I/O output gets Lo/Hi (ON/OFF) linking flash of LED of each set point.
✔ Note	**Use in a corrosive gas atmosphere** If this unit is exposed to chemically active gases including corrosive gases and halogen or halogenated gases, problems will occur such as filament breaks or pressure characteristics changing. When using this unit in these types of environments, install an isolation valve between this unit and the vacuum chamber and protect this unit as much as possible so it is not exposed to these gases.
✔ Note	**Use in a CVD gas atmosphere** If this unit is exposed to gases that deposit materials including CVD (Chemical Vapor Deposition) material gases and rotary pump oil mist, problems will occur such as filament breaks or pressure characteristics changing. When using this unit in these types of environments, install an isolation valve between this unit and the vacuum chamber and protect this unit so it is not exposed to these gases.

✔ Note	**In case of flammable gas using** This unit and pirani gauge SPU heats filaments by electrification. Therefore it is recommended installing a valve between the sensor head and chamber to prevent the explosion by flammable gas and heated electrification.
✔ Note	**Magnetic field influence** The pressure reading of this unit is particularly affected (about 10%) by the influence of magnetic fields of 0.002 T (20 Gauss). If this unit is affected by magnetic fields, install magnetic shielding.
✔ Note	**Moisture and fouling** If there is a large quantity of fouling in the gauge head from the gradual vaporization of moisture or organic matter, pressure accuracy and response speed will be affected. Review installation locations and methods so that fouling does not occur.
✔ Note	**Temperature fluctuations** The ambient temperature of the gauge head affects the measured value due to the measurement principle of the Pirani vacuum gauge. Be careful with the attachment location so the ambient temperature does not dramatically deviate from the temperature during calibration (approx. 25°C).
✔ Note	**Gas flow in the measurement system** The pressure measurement measures the static pressure at the location where the gauge head is connected. Take care to attach this unit in a location that is unaffected by gas flows and emitted gas in the measurement system.
✔ Note	**Influence of electrons, ions, etc.** If this unit is near a strong generation source of electrons or ions, this unit will not be able to measure pressure correctly, and there is a risk of damage to this unit and a risk of malfunction. Take care to attach this unit in a location that is unaffected by electrons and ions.
✔ Note	**Check wiring** Ensure that the connection cable to each pin does not contact other pins or the case. Use caution not to mistake the pin assignments. If the wiring is wrong, there is a risk of damage to this unit and to devices connected to this unit and a risk of fire.
✔ Note	**Laying down cables** Do not wire this unit cable in proximity or parallel to electrical lines, power lines, high voltage lines, or high frequency lines. There is a risk of malfunction.
✔ Note	**Voltage drop of power cable** Due to voltage drop of power cable, voltage supplied to this unit may be lower than DC20V, especially when the cable is thinner than AWG24. Recommended cable length when DC power supply voltage is 24V and environmental temperature is 20℃ are the followings. AWG26 : 10m, AWG24 : 20m, AWG22 : 30m
✔ Note	**Remote host noise resistance** Use highly noise resistant insulated-type PC and PLC (programmable logic controller) remote hosts. There is a risk of malfunction and failure.
✔ Note	**Impacts** Do not expose this unit to impacts. There is a risk of breaking filaments and damaging the attachment section by impacts.

✔ Note	**Transportation packaging** When transporting this unit, do so in the same state as when it was delivered from the factory. There is a risk of damage if this unit is transported without packaging or transported attached to the equipment.
✔ Note	**Maintenance** The electrical circuitry inside this unit uses aluminum electrolytic capacitors. In general, aluminum electrolytic capacitors possess an operating life and that operating life decreases the more the ambient temperature increases. To prevent damage to the device, we recommend maintenance at ULVAC about once every three years.

Revision History

DATE	No.	Description
Mar. 9, 2012	00	1st version
Aug. 2, 2012	01	・Section 13.1. Adjustment of atmospheric pressure: Corrected to pressing of ADJ button ・Section 14.2.1.1. RS-232C wiring diagram Wrong) SENSOR GND 11 - 7 Host GND Correct) SENSOR GND 14 - 5 Host GND
Jan. 25, 2013	02	・Safety Precautions: ・Added the operating life of tungsten filament: the life of air introduction 1Pa is approx. 3 hours ・Added the following cases to CAUTION: supplied voltage of 20V or less and voltage drop of power cable ・Added the CAUTION that I/O output flashes in synchronization with flashing LED when setting set point ・Added the CAUTION that output of set point and pressure signal come from the same terminal when setting set point ・Section 2. Specifications: Corrected the internal volume of M-34 from $34cm^3$ to $17cm^3$ ・Section 9.5. Simple conversion tables: Amended pressure to exponent, and decimal place to mantissa ・Section 16. Troubleshooting: Added the following cases: FIL LED flashes, pressure value fluctuates, and setpoint signal is not output ・Section 18. Corrected the content of warranty
Sep. 2, 2013	03	・Section 9. Analog output: Deleted the analog output voltage of 0.1V or less as power supply fault ・Section 11.3. Configuring the setpoints: Added coarse adjustment and fine adjustment
Jan. 7, 2014	04	・Section 10.5.3. Corrected emission current from Hi to Lo when SPU/SAU operates normally. Software ver.109 and seral number greater than or equal to 01000 ・Section 2.5. Changed instruction manuals to CD, added quick manual ・Section 4.6. I/O connector: Added connection signal to No.4 emission valid ・Section 6. Mode Configurations: Amended the default to SPU combination mode ・Section 10.5. Added the description of emission valid signal and connection check signal
Mar. 17, 2014	05	・Section 6. Mode Configurations: Added mode 3 and 4 Mode 1/2: Emission valid ON when SPU/SAU operates normally Mode 3/4: Emission valid OFF when SPU/SAU operates normally ・Section 2.5. Changed gauge head as optional

		・Section 4.3. Added the mode when FIL LED is Off ・Section 6. Added the description of mode setting ・Section 7.4. Added the mode when FIL LED is Off ・Section 10.5.3. Added the difference of mode setting of emission valid signal ・Section 14.6.2. Added to CAUTION that Em.Valid OK signal varies when reading serial communications status
Jul. 8, 2014	06	Correction of errors
Apr. 15, 2015	07	・Section 8.3. FIL 1/2 signal: Added the necessity to turn off the filament when changing filament 1/2
May. 20, 2016	08	・Safety Precautions: Added the Note when using in a flammable gas atmosphere ・Section 2.1. Specifications: Added M-36 ・Section 2.1. Specifications: Added the following state to power supply voltage: steady state, degas, and inrush current ・Section 2.4. Separately ordered products: Added M-36, test results certificate, and calibration certificate ・Section 8.2. FIL ON/OFF signal: Added the recommendation to inject purge gas 5 seconds after FIL OFF ・Section 16. Troubleshooting: Added the case in which pressure reading does not change around 1Pa ・Correction of errors
Nov. 9, 2016	09	・Section 13. Atmospheric and 0 point adjustment of SAU: Added 0 point adjustment of SAU at the altitude of around 500m or more and at atmospheric depression lower than 950hPa to avoid the case that pressure indication does not decrease from 1.2 x 10^{+4}Pa
May. 10, 2019	10	・Added revision history ・Section 6. Mode Configurations: Added BMR2 compatible mode (Mode 9) ・Correction of errors
Sep. 20, 2019	11	Added Pirani Vacuum gauge Measuring Unit SWU
Nov. 9, 2022	12	・Section 1.1 Added SW100, SH200 and ST200 ・Section 2.1 Added UKCA standard ・Section 2.6 Deleted Instruction manuals (CD) ・Section 9.1 Corrected pressure unit dependent for Torr ・Section 19 Corrected starting point of warranty period ・Section 20 Updated EC declaration of conformity ・Section 21 Added UKCA declaration of conformity

Contents

1. Introduction

1.1. G-TRAN Series overview

There are a number of units in the G-TRAN Series vacuum gauge and these are classified as shown below. "Sensor unit" in the text indicates all types and models of box units and sensor units.

as of Oct. 2022

Unit Major classification	Unit Minor classification	Specification	Type	Model
Measurement unit	Box unit	Analog/communication	Pirani	BPR2*
			Ionization	BMR2*
	Sensor unit	Analog	Pirani	SP1
		Analog	CCG	SC1
		Analog/communication	Pirani (atmospheric pressure)	SW100 SW1
		Analog/communication	Ionization, multi	SH200 SH2*
				ST200 ST2*
		SH2/ST2-dedicated	Pirani	SWU
		SH2/ST2-dedicated	Pirani	SPU
		SH2ST2-dedicated	Pressure sensor	SAU
		Analog	Diaphragm	CCMT-D
Display unit	1CH Digital	24 VDC	Pirani/ionization/ CCG/diaphragm/multi	ISG1
	4CH Digital	24 VDC	Pirani/ionization/ CCG/multi	IM1R1*
		100 VAC		IM2R1*

*End production.

1.2. Commentary on phrasing

The phrases below in this document each have the same meaning.

Program	PROGRAM	PROG
Filament	FILAMENT	FIL
High voltage	HIGH VOLTAGE	HV
Degas	DEGAS	DEG
Zero	ZERO	ZERO
Setpoint	SETPOINT	ST
Wire break signal	ERROR	ERR
Protect (pressure protection)	PROTECT	PRT
Emission valid	Emission Valid, Em.Valid	E.V.
Communication mode	REMOTE MODE	RS-MODE
CAL function	CALCULATING FUNCTION	CAL

Pirani vacuum gauge	Pirani gauge	PG
Hot-cathode ionization gauge	Hot-cathode gauge	IG
Cold-cathode ionization gauge	Cold-cathode gauge	CCG
Diaphragm vacuum gauge	Ceramic capacitance manometer	CCM

2. Specifications

The SH2-1/SH2-2 can select the use of four types of modes shown in the table below.

①	②	③	④
SH2 independent mode	SPU Combination mode	SAU Combination mode	SWU Combination mode
Ionization gauge only	The Pirani vacuum gauge measuring unit (SPU) and ionization gauge combination	The pressure sensor (SAU) and the Pirani vacuum gauge measuring unit (SWU/SPU) and ionization gauge combination	The Pirani vacuum gauge measuring unit (SWU) and ionization gauge combination
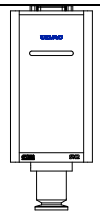	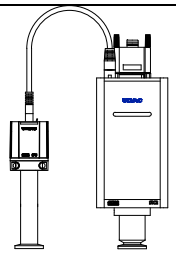	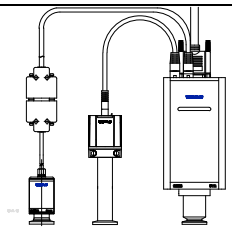	

*SWU and SPU cannot be used at the same time.

2.1. SH2-1/SH2-2 Specifications

Name	Multi-ionization gauge	
Type name	Standard Type	Serial Communications Type
Model	SH2-1	SH2-2
Connectable sensors	SH2 gauge head M-44/34 (NW16), M-45/35 (NW25), M-46/36(UFC070): 1 SWU Pirani vacuum gauge measuring unit: 1 (option) SPU Pirani vacuum gauge measuring unit: 1 (option) SAU pressure sensor unit: 1 (option)	
Measurement pressure range (N_2)	SH2 independent mode: $5x10^{-8}$ Pa to $1x10^{+1}$ Pa	
Accuracy (N_2)	SH2 independent mode: $5x10^{-8}$ Pa to $1x10^{+1}$ Pa: ±15%	
Repeatability (N_2)	SH2 independent mode: $1x10^{-6}$ Pa to $1x10^{-1}$ Pa: ±2%	
Measurement gas type	Indicates pressure as sensitivity for N_2	
Emission current	1 mA ($1x10^{-3}$ Pa or lower), 10 uA	
DEGAS	Electron bombardment Emission current 1 mA, grid voltage approx. 330 V, $1x10^{-3}$ Pa or lower	
Sampling time	50 ms, 5x moving average	
Analog output	Output voltage: 0 to 10 VDC, log output: 0.75 V/1 decade Pressure conversion equation: P=10^{(V-7.25)/0.75+2} V=7.25+0.75*(logP-2) * Also combined with the output voltage for setpoint adjustment (SH2-1 only)	
Update time	50 ms	
Resolution	Approx 2.5 mV	
Output error	±20 mV	
Output impedance	1kΩ	
Control input signals	FIL ON/OFF, FIL 1/2, DEGAS ON/OFF Operates with open collector input, negative logic	

Control output signals	Sensor error, setpoint 1/2/3, emission valid, filament power monitor Rating: 24 V_{MAX}, 50 mA_{MAX}, saturation voltage 1 V	
Serial communications		RS-232C, RS-485
Baud rate		9600/19200/38400 bps
LED display	POWER/ERROR: Power, error	
	SPU: Pirani vacuum gauge SWU/SPU status indicator	
	SAU: Pressure sensor SAU status indicator	
	FIL: Ionization gauge filament status indicator	
	SET1: Setpoint 1	
	SET2: Setpoint 2	
	SET3: Setpoint 3	
Gauge head material	Filament M-44/45/46 Filament 1: Ir/Y_2O_3-coated, Filament 2: Ir/Y_2O_3-coated M-34/35/36 Filament 1: Ir/Y_2O_3-coated, Filament 2: Tungsten Others : PtC-Mo, SUS304, W, Kovar glass, Kovar/Ni plating	
Gauge head withstand pressure	$2x10^{+5}$ Pa (absolute pressure) * Take the withstand pressure for flanges, clamps, and other components into account separately.	
Gauge head internal volume	M-44/34: 17 cm^3, M-45/35: 19 cm^3, M-46/36: 17 cm^3	
Operating temperature range	10 to 50°C	
Bake out temperature	Sensor: 150°C (when controller SH2 is disconnected) Flange part of sensor head : 80°C (Temperature Surround controller is less than 50°C only when mounting position is horizontal.) ※The specification and accuracy of this gauge is not guaranteed when this sensor head is heating.	
Operating humidity range	15% to 80% RH (no condensation)	
Storage temperature	-20 to 65°C (when unpowered, no condensation)	
IP code	IP30	
Power supply voltage	20 to 28 VDC (ripple, noise 1% or lower) Steady state: 8W Degas: 19W Inrush current: 6A or lower (4ms or lower)	
Corresponding standard	CE standard, UKCA standard Validated with SPU, SAU connected Display cable 40m SH2-SWU/SPU unit cable 0.5m* SH2-SAU unit cable 0.5m* *When using a unit cable of 0.5m or longer, consider noise separately.	
Overvoltage category	Category I: Connected to a circuit that implements measures to limit excessive overvoltage to a sufficiently low level	
I/O connector	D-sub 15-pin connector (pin, 2.6 mm screws)	
Sensor weight	Controller SH2: Approx. 530 g, Sensor M-44/34: 80 g, M-45/35: 80g, M-46/36: 300g	
External dimensions	144 x 75 x 62 mm (approximate, controller SH2 section)	

2.2. SPU combination mode key specifications

Measurement pressure range	SPU : $5x10^{-8}$ Pa to $1x10^{+4}$ Pa When pressure falling: Automatically switches from Pirani vacuum gauge to ionization gauge at $2x10^{+0}$ Pa(SPU) When pressure rising: Automatically switches from ionization gauge to Pirani vacuum gauge at $3x10^{+0}$ Pa(SPU) * Ionization gauge measurements can be forced off with the control signal
Accuracy	$1.0x10^{-1}$ Pa to $4.0x10^{-1}$ Pa: no accuracy guarantee $4.0x10^{-1}$ Pa to $1.0x10^{+0}$ Pa: ±30% $1.0x10^{+0}$ Pa to $1.0x10^{+3}$ Pa: ±15% $1.0x10^{+3}$ Pa to $3.0x10^{+3}$ Pa: ±30% $3.0x10^{+3}$ Pa to $1.0x10^{+4}$ Pa: no accuracy guarantee In the overlapping pressure region of 3 Pa to 0.4 Pa, the measured pressure for the Pirani vacuum gauge and ionization gauge is adjusted and output. * Measurements on the Pirani vacuum gauge and the ionization gauge are dependent on the gas type. Be particularly aware of the difference in pressure readings when the gauges switch.
POWER/ERROR LED state	Blue on: Operating normally Red on : SH2-1/2, SPU power supply abnormality, etc.
Control input signals	FIL ON/OFF, FIL 1/2, DEGAS ON/OFF Operates with open collector input, negative logic * When the FIL ON/OFF signal is low input, the ionization gauge is FIL OFF

2.3. SAU combination mode key specifications

Measurement pressure range	$5x10^{-8}$ Pa to $1x10^{+5}$ Pa When pressure falling: Automatically switches from the pressure sensor to Pirani vacuum gauge at $1x10^{+4}$ Pa(SAU) When pressure falling: Automatically switches from Pirani vacuum gauge to ionization gauge at $2x10^{+0}$ Pa(SWU/SPU) When pressure rising: Automatically switches from ionization gauge to Pirani vacuum gauge at $3x10^{+0}$ Pa(SWU/SPU) When pressure rising: Automatically switches from Pirani vacuum gauge to pressure sensor at $1x10^{+4}$ Pa(SAU) * ionization gauge measurements can be forced off with the control signal
Accuracy	$1.0x10^{+4}$ Pa to $3.0x10^{+5}$ Pa : ±3%F.S.(±$3x10^{+3}$Pa) In the overlapping pressure region of 3 Pa to 0.4 Pa, the measured pressure for the Pirani vacuum gauge and ionization gauge is adjusted and output. * The pressure sensor measures at gauge pressure and the Pirani sensor measures as absolute pressure, so a margin of error occurs from altitude and air pressure. * Measurements on the Pirani vacuum gauge and the ionization gauge are dependent on the gas type. Be particularly aware of the difference in pressure readings when the gauges switch.
POWER/ERROR LED state	Blue on: Operating normally Red on : SH2-1/2, SWU/SPU or SAU power supply abnormality, etc.
Control input signals	FIL ON/OFF, FIL 1/2, DEGAS ON/OFF Operates with open collector input, negative logic * When the FIL ON/OFF signal is low input, the ionization gauge is FIL OFF

2.4. SWU combination mode key specifications

Measurement pressure range	$5x10^{-8}$ Pa to $1x10^{+5}$ Pa When pressure falling: Automatically switches from Pirani vacuum gauge to ionization gauge at $2x10^{+0}$ Pa(SWU) When pressure rising: Automatically switches from ionization gauge to Pirani vacuum gauge at $3x10^{+0}$ Pa(SWU) *Ionization gauge measurements can be forced off with the control signal
Accuracy	$1x10^{-1}$Pa～$1x10^{+4}$Pa: ±10% $5x10^{-2}$Pa～$1x10^{-1}$Pa: ±20% $1x10^{+4}$Pa～$1x10^{+5}$Pa: ±20% In the overlapping pressure region of 3 Pa to 0.4 Pa, the measured pressure for the Pirani vacuum gauge and ionization gauge is adjusted and output. * The pressure sensor measures at gauge pressure and the Pirani sensor measures as absolute pressure, so a margin of error occurs from altitude and air pressure. * Measurements on the Pirani vacuum gauge and the ionization gauge are dependent on the gas type. Be particularly aware of the difference in pressure readings when the gauges switch.
POWER/ERROR LED state	Blue on: Operating normally Red on : SH2-1/2 or SWU power supply abnormality, etc.
Control input signals	FIL ON/OFF, FIL 1/2, DEGAS ON/OFF Operates with open collector input, negative logic * When the FIL ON/OFF signal is low input, the ionization gauge is FIL OFF

2.5. Accessory

Multi-ionization gauge SH2-1/2 unit	1pc
Sensor for SH2 M series*	1pc
Quick Manual	1paper

* Only when you order at the same time as SH2, it will be attached to SH2 and delivered.
* The sensor model is the one you specified when ordering.

2.6. Separately ordered products

Sensor for SH2	M-44(NW16), M-45(NW25), M-46(UFC070) M-34(NW16), M-35(NW25), M-36(UFC070)	
Connector for SH2	D-sub 15-pin connector (socket, 2.6 mm screws)	
Calibration certificate	General calibration test report, JCSS calibration certificate	
Inspection report		
Traceability certificate		
Display unit	1CH	Model ISG1 (24 VDC power supply)
	4CH	Model IM1R1 (24 VDC power supply) Model IM2R1 (100 VAC power supply)
Display cable	Cable connecting SH2 and display unit 2 m, 5 m, 10 m, 15 m, 20 m, 25 m, 30 m, 35 m, 40 m	
Pirani vacuum gauge sensor unit	SWU	
Sensor for SWU SWP series	SWP-16, SWP-25, SWP-CF16, SWP-P15, SWP-P18, SWP-R1/8, SWP-1S	
Pirani vacuum gauge sensor unit	SPU	
Sensor for SPU WP series	WP-01, WP-02, WP-03, WP-16	

Unit cable GUC-P	Cable connecting SH2 and SWU/SPU 0.5m, 1m, 2m
Pressure sensor SAU	
Unit cable GUC-A	Cable connecting SH2 and SAU 0.5m, 1m, 2m * The connector that connects this unit cable and SAU are connected by a cable of about 0.5m.

2.7. Unpacking and quantity check

When the product is delivered, promptly unpack and check it.

Check that the product was not damaged during shipping. Check that the proper quantity of accessories was included with the product.

3. Handling Precautions

Please check this section prior to use.

3.1. Post-operation checks

⚠CAUTION	**SAU pressure reading check** Check the SAU atmospheric pressure immediately after use. Adjust the atmospheric pressure as necessary.
⚠CAUTION	**Tolerance of SAU at altitude and atmospheric depression.** The atmospheric and 0 point adjustment is required at the altitude of more than 500m around and at atmospheric depression lower than 950hPa. Without the adjustment, pressure indication will not decrease from 1.2 x 10^{+4}Pa.
⚠CAUTION	**SWU pressure reading check** Check the SWU atmospheric pressure immediately after use. Adjust the atmospheric pressure as necessary.
⚠CAUTION	**Gas type dependency** The pressure value and accuracy for this unit and the SPU pirani measuring unit differ by the type of gas measured. The accuracy for this unit is based on measuring nitrogen gas. Be careful when using gases other than nitrogen.

3.2. Precautions related to the operating environment

⚠WARNING	**Excessive vacuum chamber pressure** Do not connect this unit in a location where the gauge head's internal pressure exceeds atmospheric pressure. It may pose a hazard to its surroundings, including to people, if the gauge head is damaged or it flies off its connector. When exceeding atmospheric pressure, install an isolation valve to ensure that the gauge head's internal pressure does not exceed atmospheric pressure.
⚠WARNING	**Operating environment** Avoid using this unit in locations with high humidity and condensation or in locations exposed to water. There is a risk of malfunction, ground leakage, and fire if water penetrates inside this unit.
⚠CAUTION	**Foreign object insertion** Protect this unit so that metallic and flammable foreign objects cannot enter the interior of this unit from the openings.
⚠CAUTION	**Operating environment** Use this unit within the environment range defined by the specifications.
✔ Note	**Moisture and fouling** If there is a large quantity of fouling in the gauge head from the gradual vaporization of moisture or organic matter, the vacuum-side pressure accuracy and response speed will be affected. Review installation locations and methods so that fouling does not occur.
✔ Note	**Use in a corrosive gas atmosphere** If this unit is exposed to chemically active gases including corrosive gases and halogen or halogenated gases, problems will occur such as filament breaks or pressure characteristics changing. When using this unit in these types of environments, install an isolation valve between this unit and the vacuum chamber and protect this unit as much as possible so it is not exposed to these gases.

✔ Note	**Use in a CVD gas atmosphere** If this unit is exposed to gases that deposit materials including CVD (Chemical Vapor Deposition) material gases and rotary pump oil mist, problems will occur such as filament breaks or pressure characteristics changing. When using this unit in these types of environments, install an isolation valve between this unit and the vacuum chamber and protect this unit so it is not exposed to these gases.
✔ Note	**In case of flammable gas using** This unit and pirani gauge SPU heats filaments by electrification. Therefore it is recommended installing a valve between the sensor head and chamber to prevent the explosion by flammable gas and heated electrification.
✔ Note	**Impacts** Do not expose this unit to impacts. There is a risk of breaking the filament and damaging the attachment section by impacts.

3.3. Precautions related to use

⚠ WARNING	**Power supply voltage** Before turning on the power supply, check that this unit operating voltage and the supply power are the same. If the wrong power supply is connected, there is a risk of damage to this unit and to devices connected to this unit and a risk of fire. In particular, do not apply a voltage that exceeds 30 VDC.
⚠ WARNING	**Power supply lightning surge handling** Please don't use this instrument with directly connected to DC distribution network
⚠ CAUTION	**Operating power supply** Always connect this unit to a power supply and evaluation unit that conforms to standards (EN61010 SELV-E) for grounded protective extra low voltage. Install a fuse in the connection.
⚠ CAUTION	**Power on** Turn on the power supply after all the equipment, including the gauge head, display, evaluation unit, and cables, has been connected to this unit. If the power is supplied before connecting them, there is a risk of damage to this unit and to devices connected to this unit and a risk of fire. There is also a risk of breaking the filament in the gauge head.
✔ Note	**Check wiring** Ensure that the connection cable to each pin does not contact other pins or the case. Use caution not to mistake the pin assignments. If the connection is wrong, there is a risk of damage to this unit and to devices connected to this unit and a risk of fire.
✔ Note	**Gas flow in the measurement system** The pressure measurement measures the static pressure at the location where the gauge head is connected. Take care to attach this unit in a location that is unaffected by gas flows and emitted gas in the measurement system.
✔ Note	**Influence of electrons, ions, etc.** If this unit is near a strong generation source of electrons or ions, this unit will not be able to measure pressure correctly, and there is a risk of damage to this unit and a risk of malfunction. Take care to attach this unit in a location that is unaffected by electrons and ions.

✔ Note	**Magnetic field influence** The pressure reading of this unit is particularly affected (about 10%) by the influence of magnetic fields of 0.002 T (20 Gauss). If this unit is affected by magnetic fields, install magnetic shielding.

- Secure cables as much as possible so that force is not applied to cable connectors.
- Firmly tighten the connector locking screws.
- Fully insert the unit cables.
- Allow this unit to age for 20 minutes or longer before taking measurements.

3.4. Power supply

⚠ WARNING	**Power supply voltage** Before turning on the power supply, check that this unit operating voltage and the supply power are the same. If the wrong power supply is connected, there is a risk of damage to this unit and to devices connected to this unit and a risk of fire.
⚠ CAUTION	**Voltage supply to this unit** If voltage supplied to this unit is less than DC20V, it does not show accurate pressure. Please confirm supplied voltage to this unit as well as DC power supply voltage.
✔ Note	**Voltage drop of power cable** Due to voltage drop of power cable, voltage supplied to this unit may be lower than DC20V, especially when the cable is thinner than AWG24. Recommended cable length when DC power supply voltage is 24V and environmental temperature is 20℃ are the followings. AWG26 : 10m, AWG24 : 20m, AWG22 : 30m

3.5. Attaching this unit

3.5.1. Sensor attachment environment

⚠ WARNING	**Protective grounding** Always connect this unit electrically to a grounded vacuum chamber. Use a conductive metal clamp on the NW flange. If this unit is not correctly connected, it will not only show the wrong pressure, there is a risk of damage to this unit and the equipment connected to this unit and a risk of fire. When this unit is insulated from the vacuum chamber, ground the case section (D-sub connector shell section) with a class D (class 3) ground.

- The pressure measurement measures the static pressure at the location where the gauge head is connected. When installed in environments with a flow in the vacuum system or environments with emitted gas sources or strong generation sources of electrons or ions, use caution in selecting the measurement location and attach this unit in a relatively unaffected location.

3.5.2. Attaching the gauge head

- Attach this unit so that the gauge head attachment opening surface is parallel to the gas flow. In particular, ensure that gases do not enter the gauge head interior like a beam.
- The Pirani vacuum gauge head filament is thin at φ25 μm, so avoid use as much as possible in locations with large amounts of vibrations. The biggest cause of filament breaks is from mechanical shock, so use caution regarding the installation location and handling.
- Use an O-ring to attach the gauge head that releases little gas. There is a risk of measurement errors or the gauge head operating life will decrease if materials that release a large quantity of gas, such as rubber tubing or grease, are used in the gauge head connection.

4. Part Names and Functions

4.1. Controller SH2

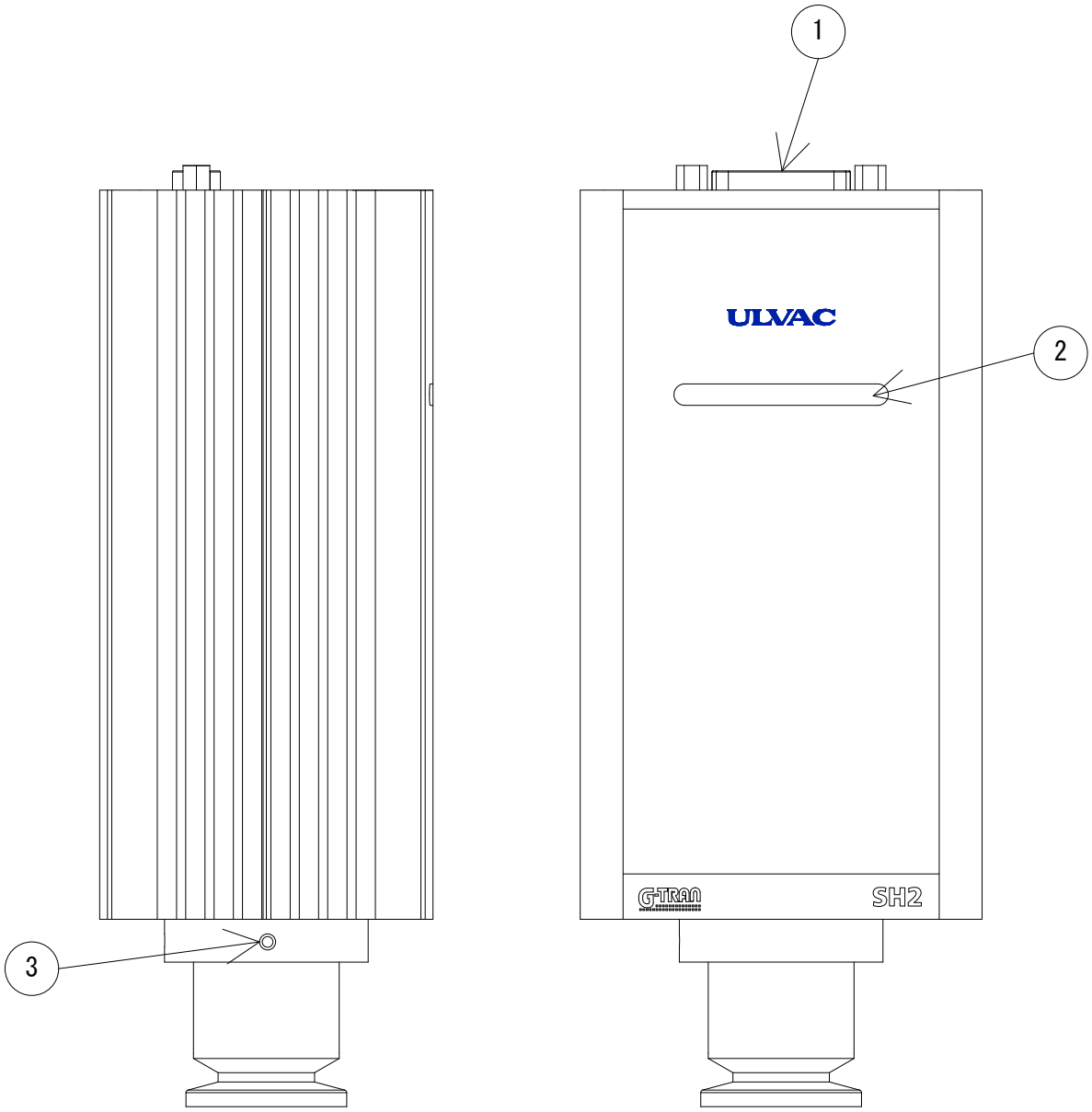

Figure 4-1 Mechanical section explanatory drawing

Name		Function
1.	I/O connector	Mating screws (M2.6 mm screws) for the I/O connector clamp hood. D-sub 15-pin (pin M2.6 mm screws)
2.	POWER/ERROR LED	Blue on: Operating normally Red on : Error such as a filament break Off : Power off
3.	Gauge head locking screws	Screws to lock the gauge head (M3 mm screws) 2 locations

4.2. Panel - SH2-1 Standard Type

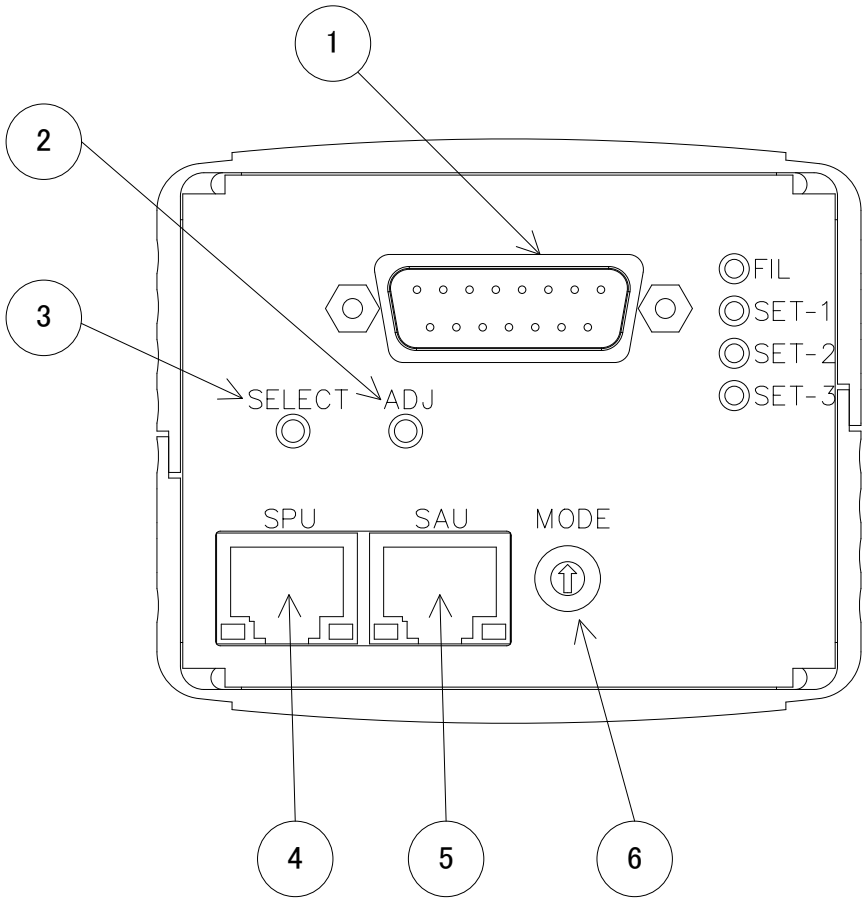

Figure 4-2 SH2-1 Standard Type panel explanatory drawing

Name (symbol)		Function
1.	I/O connector	I/O connector for signals including the power supply and data. D-sub 15-pin (pin M2.6 mm screws)
2.	ADJ switch	Adjustment switch when adjusting pressure for the SAU/SWU
3.	SELECT switch	Selection switch for pressure measurements, setpoint configuration, and SAU/SWU pressure adjustments
4.	SPU connector	Connector (RJ-45) to connect the SWU/SPU
5.	SAU connector	Connector (RJ-45) to connect the SAU
6.	MODE switch	Mode configuration switch for SH2 independent mode, SWU/SPU combination mode, and SAU combination mode.

4.3. Panel LEDs - SH2-1 Standard Type

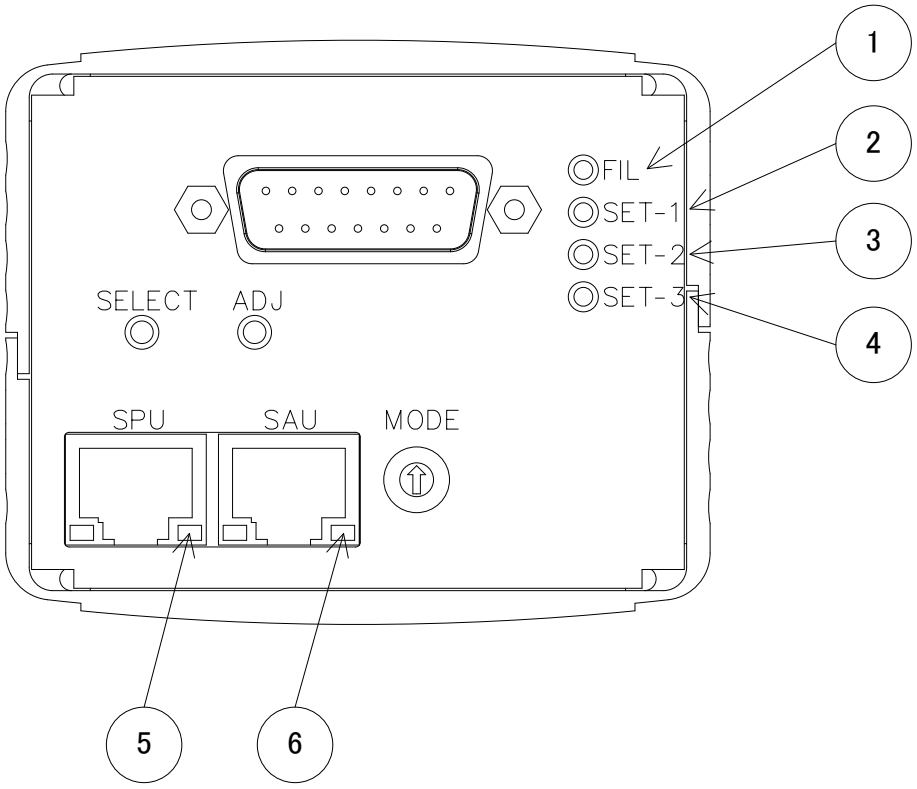

Figure 4-3 SH2-1 Standard Type panel LEDs explanatory drawing

Name (symbol)		Function
1.	FIL LED	Off : MODE 0/3/4 FIL OFF MODE 1/2 POWER OFF 0.5 second flashing : Filament power monitor abnormality 1 second flashing : Ionization gauge filament break, emission current abnormality 3 second flashing : Pressure protection (SH2 independent mode only)
2.	SET-1 LED	When the setpoint1 do ON, the LED turns on.
3.	SET-2 LED	When the setpoint2 do ON, the LED turns on.
4.	SET-3 LED	When the setpoint3 do ON, the LED turns on.
5.	SPU LED	On : Operating normally Flashing: Error including Pirani vacuum gauge filament break Off : Mode not configured, power off
6.	SAU LED	On : Operating normally Flashing: Error such as SAU fault, or when adjusting pressure Off : Mode not configured, power off

4.4. Panel - SH2-2 Serial Communications Type

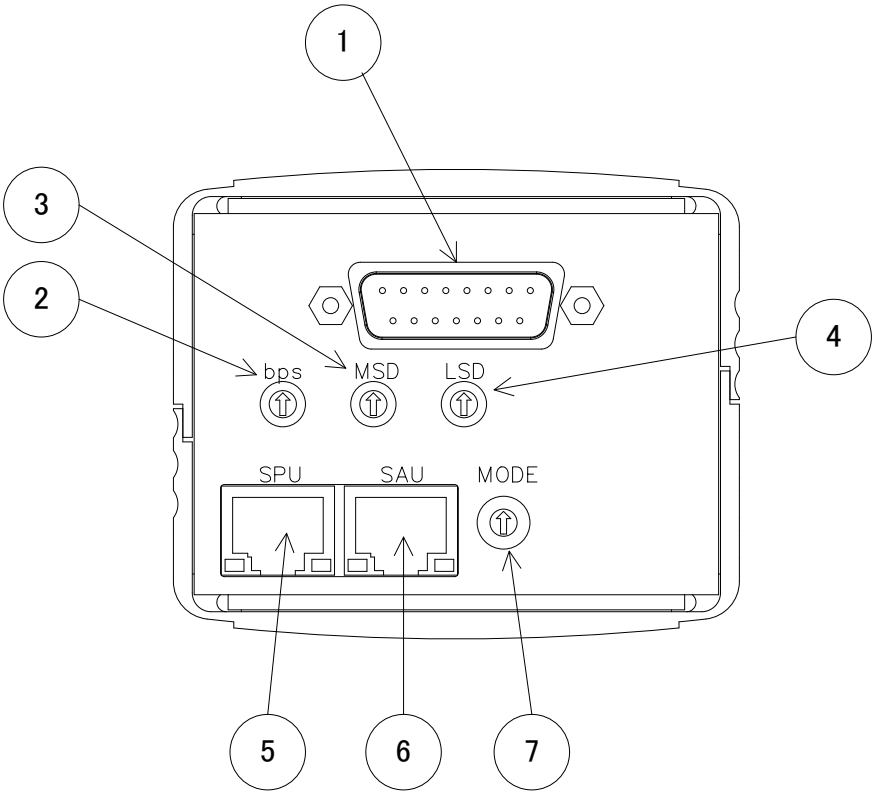

Figure 4-4 SH2-2 Serial Communications Type panel explanatory drawing

Name (symbol)		Function
1.	I/O connector	I/O connector for signals including the power supply and data D-sub 15-pin (pin M2.6 mm screws)
2.	bps switch	Baud rate (communication speed) configuration switch
3.	MSD switch	Communication address configuration switch, 10s place
4.	LSD switch	Communication address configuration switch, 1s place
5.	SPU	Connector (RJ-45) to connect the SWU/SPU
6.	SAU	Connector (RJ-45) to connect the SAU
7.	MODE switch	Mode configuration switch for SH2 independent mode, SWU/SPU combination mode, and SAU combination mode.

4.5. Panel LEDs - SH2-2 Serial Communications Type

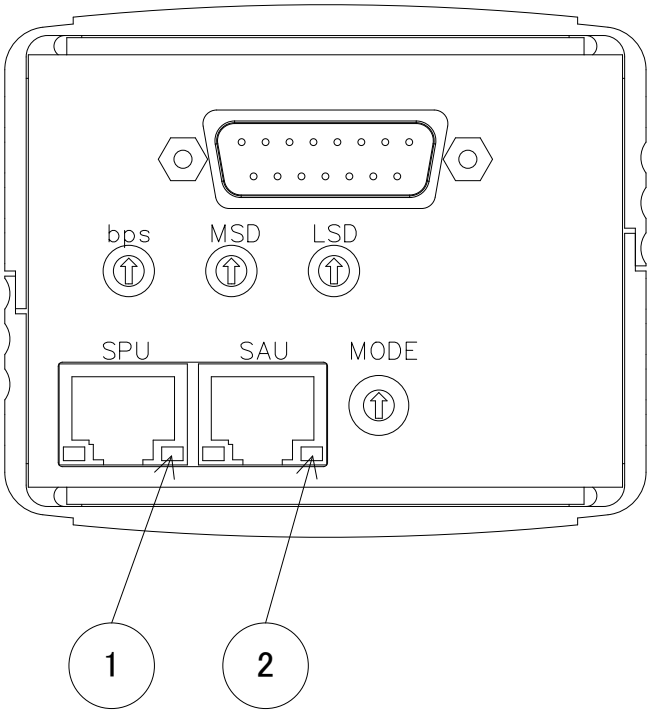

Figure 4-5 SH2-2 Serial Communications Type panel LEDs explanatory drawing

Name (symbol)		Function
1.	SPU LED	On : Operating normally Flashing: Error including Pirani vacuum gauge filament break Off : Mode not configured, power off
2.	SAU LED	On : Operating normally Flashing: Error such as SAU fault, or when adjusting pressure Off : Mode not configured, power off

4.6. I/O connector - SH2-1 Standard Type

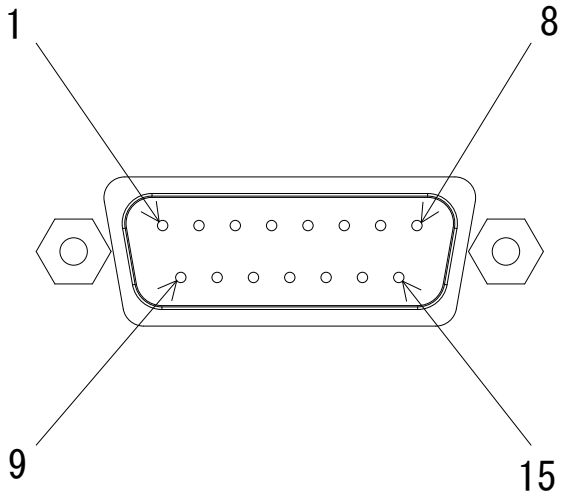

Figure 4-6 SH2-1 Standard Type I/O connector pin assignment explanatory drawing
D-sub 15-pin (pin, M2.6 mm screws)

Terminal number*	Sensor	Function	
1	Power supply	Power supply to drive this unit	(20 to 28 VDC)
2	Sensor error	Outputs the pressure protection signal or a signal during an error such as when there is a filament break	(Low output)
3	Setpoint 1	Outputs a signal during setpoint 1 operation	(Low output)
4	Emission valid or Connection signal	Outputs a signal when emission current is normal SPU and SAU connection check signal	(Low output)
5	FIL ON/OFF	Input a signal to turn the filament on or off * FIL ON signal in SH2 independent mode * FIL OFF signal in combination mode	(Low input)
6	FIL 1/2	Input a signal when selecting FIL 2	(Low input)
7	FIL power monitor	Outputs a signal when the filament is approaching the end.	(Low output)
8	Pressure signal/setpoint setting output	Outputs the pressure signal and the setpoint setting output	(0 to 10 VDC)
9	Power supply GND	Ground for the power supply that drives this unit	
10	Signal GND	Output signal ground	
11	Setpoint 2	Outputs a signal during setpoint 2 operation	(Low output)
13	DEGAS ON/OFF	Input a signal during DEGAS ON	(Low input)
14	Setpoint 3	Outputs a signal during setpoint 3 operation	(Low output)
15	Signal GND	Output signal ground	
Case	FG	Frame ground	
CAUTION	**Wiring** Terminals other than the ones listed in this table are unused. Do not wire these terminals as they are used in the internal circuitry.		

4.7. I/O connector - SH2-2 Serial Communications Type

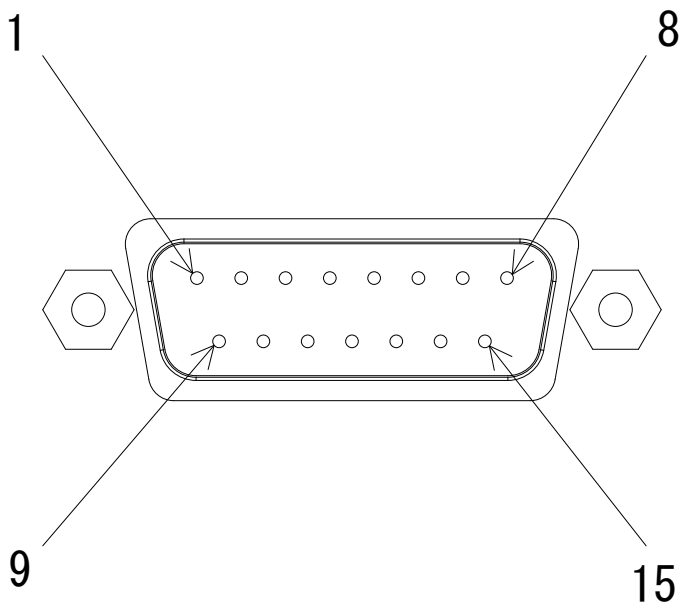

Figure 4-7 SH2-2 Serial Communications Type I/O connector pin assignment explanatory drawing
D-sub 15-pin (pin, M2.6 mm screws)

Terminal number*	Sensor	Function
1	Power supply	Power supply to drive this unit (20 to 28 VDC)
4	RS-232C RxD	RS-232C RxD
5	Terminal resistance for RS-485	Terminal resistance for RS-485, connect with pin 13
6	RS-232C TxD	RS-232C TxD
8	Analog output	Outputs the pressure signal (0 to 10 VDC)
9	Power supply GND	Ground for the power supply that drives this unit
10	RS-485-	RS-485-
12	RS-485+	RS-485+
13	RS-485 (for terminal resistance connection)	Terminal resistance for RS-485, connect with pin 5
14	RS-232C GND	RS-232C ground
15	GND	Output signal ground
Case	FG	Frame ground
CAUTION	**Wiring** Terminals other than the ones listed in this table are unused. Do not wire these terminals as they are used in the internal circuitry.	

4.8. SWU/SPU I/O connector

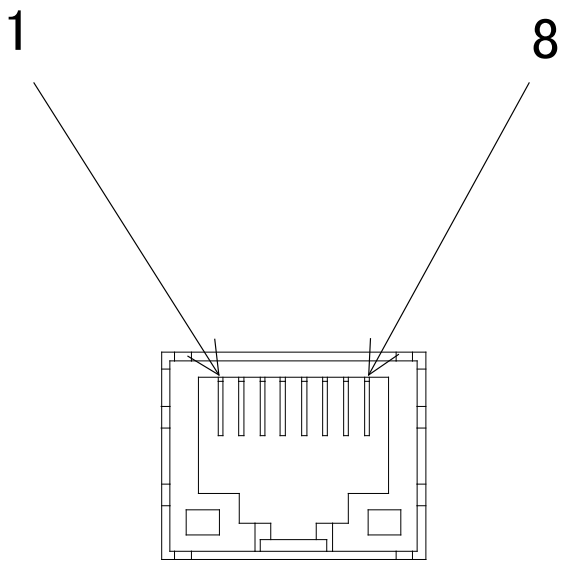

Figure 4-8 SWU/SPU I/O connector pin assignment diagram

Terminal number*	Sensor	Function
1	Power supply +5 VDC	Power supply to drive this unit (5 VDC)
2	GND	Sensor ground
3	Power supply +5 VDC	Power supply to drive this unit (5 VDC)
4	Communication terminal	Sends pressure, etc.
5	Communication terminal	Sends pressure, etc.
6	GND	Sensor ground
7	Power supply +5 VDC	Power supply to drive this unit (5DC)
8	GND	Sensor ground
Case	FG	Frame ground

4.9. SAU I/O connector

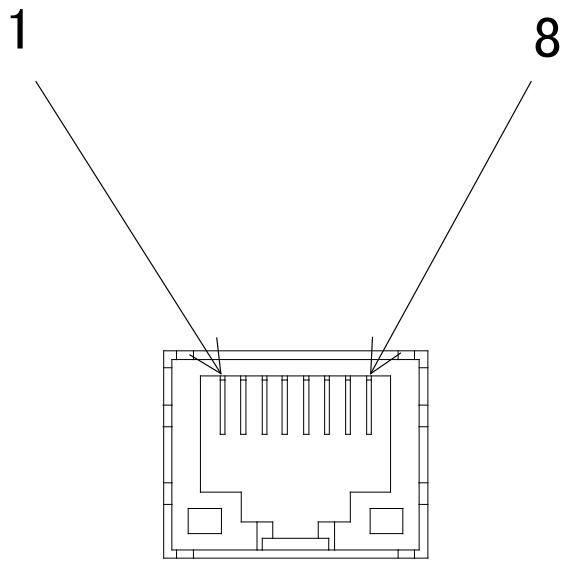

Figure 4-9 SAU I/O connector pin assignment diagram

Terminal number*	Sensor	Function
1	Power supply +15 VDC	Power supply to drive this unit (15VC)
2	GND	Sensor ground
3	Power supply +15 VDC	Power supply to drive this unit (15VDC)
4	Analog output	Pressure signal voltage (0 to 5 VDC)
5	N.C	
6	GND	Sensor ground
7	Power supply +15 VDC	Power supply to drive this unit (15 VDC)
8	GND	Sensor ground
Case	FG	Frame ground

5. Power Supply Internal Circuitry

This section describes the power supply input section.

WARNING	**Power supply voltage** Before turning on the power supply, check that this unit operating voltage and the supply power are the same. If the wrong power supply is connected, there is a risk of damage to this unit and to devices connected to this unit and a risk of fire.
WARNING	**Protective grounding** Always connect this unit electrically to a grounded vacuum chamber. Use a conductive metal clamp on the NW flange. If this unit is not correctly connected, it will not only show the wrong pressure, there is a risk of damage to this unit and the equipment connected to this unit and a risk of fire.
CAUTION	**Operating power supply** Always connect this unit to a power supply and evaluation unit that conforms to standards (EN61010 SELV-E) for grounded protective extra low voltage. Install a fuse in the connection.
CAUTION	**Check wiring** Ensure that the connection cable to each pin does not contact other pins or the case. Use caution not to mistake the pin assignments. If the connection is wrong, there is a risk of damage to this unit and to devices connected to this unit and a risk of fire.
CAUTION	**Power on** Turn on the power supply after all the equipment, including the gauge head, display, PLC, and cables, has been connected to this unit. If the power is supplied before connecting them, there is a risk of damage to this unit and to devices connected to this unit and a risk of fire.

- Signal GND (pin 15 and pin 10) is the ground for signals including analog output, setpoint, and serial communications.
- Power supply GND (pin 9) and signal GND (pin 15) are common after passing through an internal filter.
  When connecting the power supply line, please use the power supply (pin 1) and power supply GND (pin 9). When using the power supply GND (pin 9) as the signal ground, there is a possibility of being more easily affected by noise.

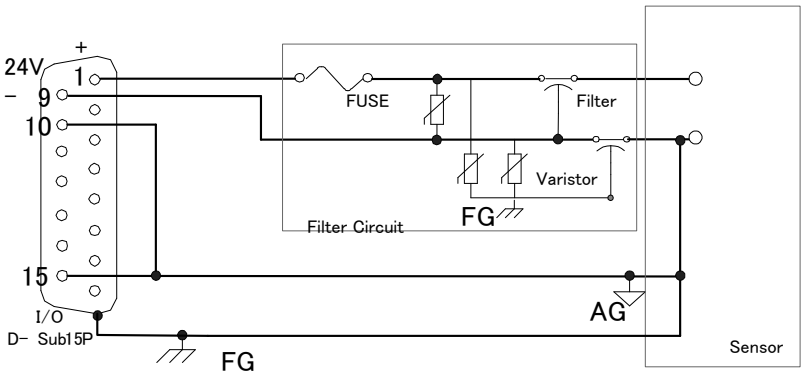

Figure 5-1 Power supply equivalent circuit

6. Mode Configurations (SH2-1/SH2-2)

Configure the mode prior to use. The default is mode “1”.

Please refer to section 0 for the difference of mode setting 1 and 3, 2 and 4. The mode setting is related to the serial number of ISG1

No.	Mode	Comments
0	SH2 independent mode	Ionization gauge only
1	SPU combination mode SWU combination mode	Pirani vacuum gauge and ionization gauge ISG1 S/N: 04050 and higher.
2	SAU combination mode	Pressure measuring, Pirani vacuum gauge, and ionization gauge ISG1 S/N: 04050 and higher.
3	SPU combination mode SWU combination mode	Pirani vacuum gauge and ionization gauge ISG1 S/N: 00001～04049
4	SAU combination mode	Pressure measuring, Pirani vacuum gauge, and ionization gauge ISG1 S/N: 00001～04049
9	BMR2 compatible mode	Output voltage is compatible with BMR2 Ionization gauge only

7. LED State Indicators

7.1. POWER/ERROR LED state indicator (SH2-1/SH2-2)

The POWER LED on states are shown in the table below.

LED state	Description	Comments
Blue on	Operating normally	
Red on	SH2-1/2 power supply abnormality Sensor abnormality (electrode short, etc.)	
	SWU/SPU/SAU unit, cable abnormality SWU/SPU gauge head abnormality	During combination mode SAU LED flashes

7.2. SPU LED state indicators (SH2-1/SH2-2)

The SPU LED on states are shown in the table below.

LED state	Description	Comments
On	Operating normally	
Flashing	SWU/SPU unit, cable abnormality	Check the SWU/SPU unit LED
	Errors such as a filament break	
Off	Mode not configured	See Chapter 6

7.3. SAU LED state indicators (SH2-1/SH2-2)

The SAU LED on states are shown in the table below.

LED state	Description	Comments
On	Operating normally	
Flashing	SAU unit, cable abnormality	
	When adjusting pressure, adjust abnormal	See Chapter 13
Off	Not configured	See Chapter 6

7.4. FIL LED state indicators (SH2-1 only)

The FIL LED on states are shown in the table below.

LED state	Description	Comments
On	Filament operating normally	Mode setting 0/3/4
	Filament operating normally or SWU/SPU and SAU operating normally	Mode setting 1/2
Off	Filament off	Mode setting 0/3/4
Flashing (3 second interval)	Pressure protection	Error at 10 Pa or higher SH2 independent mode only
Flashing (1 second interval)	Ionization gauge filament break, emission current abnormality	Ionization gauge filament break or emission current is lower than rated value
Flashing (0.5 second interval)	Filament power monitor abnormality	Filament power is above rated value

8. Control Input Signals

This chapter describes the signals that are input to this unit.
For the Standard Type, signals are input with an open collector.
For the SH2-2 Serial Communications Type, signals are input with serial communications.

8.1. Control input signals (SH2-1 only)

CAUTION	**Contact capacity** Use a capacity for externally installed contacts greater than the input power supply voltage or 30 VDC or higher.
CAUTION	**Contact leak current** Be aware of contact leak current. If a current of 0.1 mA or higher flows between the input signal pin and the GND terminal, that may be treated as signal input.

FIL ON/OFF, FIL 1/2, and DEGAS ON/OFF are input with this unit's I/O connector.
When using these signals, short between the pin of the signal to operate and the GND terminal.

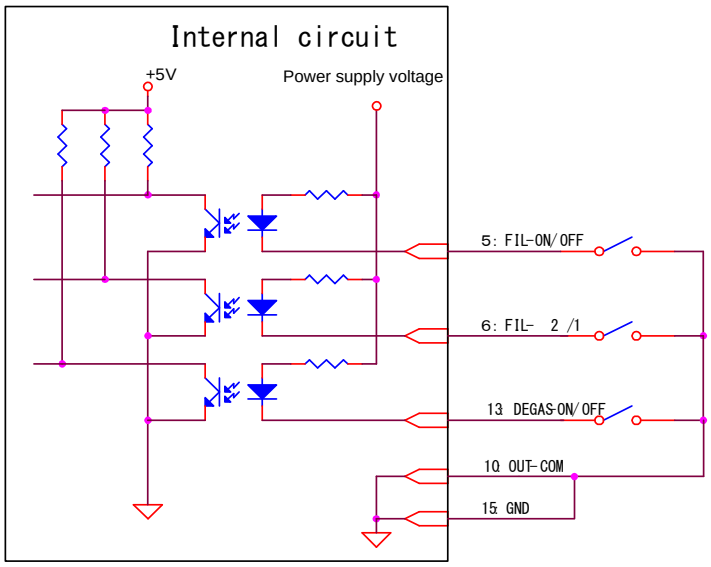

Figure 8-1 SH2-1 input signal internal circuit diagram

8.2. FIL ON/OFF signal

CAUTION	**Filament on/off signal** The filament will break if the ionization gauge filament is turned on when the pressure is high. During SH2 independent mode and combination modes, the method for using the ionization gauge filament on/off signal differs.
CAUTION	**Caution in case of purge gas injection after filament off** Recommend to inject purge gas 5seconds after filament off. Filament can have a damage in case the purge gas is injected before cooling (5sends may take to cool down).

On the SH2-1, the ionization gauge filament can be turned on or off by shorting between the terminal and the GND.

Mode	Low (when GND shorted)	High (when GND open)
SH2 independent	FIL ON	FIL OFF
Combination	Forced FIL OFF*	Auto FIL ON/OFF (Combined with Pirani vacuum gauge)

* Use forced FIL OFF when returning to atmospheric pressure from a state where the ionization gauge is FIL ON, when turning the filament off during the process, or to disable filament auto on.

For the SH2-2 Serial Communications Type, refer to Section 14 for RS-485 communication.

8.3. FIL 1/2 signal

CAUTION	**Operating gas warning** Filament 1 is yttria-coated iridium. If this unit is exposed to chemically active gases such halogen or halogenated gases, problems will occur such as filament breaks or pressure characteristics changing. Filament 2 (M-34/35/36) is tungsten. In atmospheres with a large amount of oxygen, there is a risk of the operating life decreasing from the filament burning out. (The life of Air introduction 1Pa is approximately three hours.) When using this unit in these types of environments, install an isolation valve between this unit and the vacuum chamber and protect this unit as much as possible so it is not exposed to these gases.

On the SH2-1, you can change to filament 2 by shorting between the terminal and GND.

For the SH2-2 Serial Communications Type, refer to Section 14 for RS-485 communication.

When you change the filament 1/2, you must turn off the filament.

8.4. DEGAS ON/OFF signal

CAUTION	**Pressure during DEGAS** DEGAS for this sensor uses the electron bombardment method. When performing DEGAS at a pressure higher than approx. 0.1 Pa, there is a risk of discharge occurring inside this unit which may damage not only the internal electrodes include the filaments, but the discharge may also spread to the equipment-side damaging other devices. $1x10^{-3}$ Pa protection is applied on the SH2, but do not allow the pressure to rise rapidly.

On the SH2-1, you can turn on DEGAS by shorting between the terminal and GND.

For the SH2-2 Serial Communications Type, refer to Section 14 for RS485 communication.

During DEGAS, DEGAS automatically turns off when the pressure measured by the SH2 becomes higher than $1x10^{-3}$ Pa, and DEGAS automatically turns on when the pressure once again becomes lower than $1x10^{-3}$ Pa.

The pressure reading on the SH2 during DEGAS is a reading approximately 1/2 the actual pressure when the SH2 itself is not outgassing.

9. Analog Output (SH2-1/SH2-2)

CAUTION	**Setting of set point** Output of set point and pressure signal comes from same terminal. It may cause misreading. When you change set point value while the system is running, please pay attention not to proceed in running mode.

This unit outputs the measured pressure as a 0 to 10 VDC voltage signal.
I/O connector: pin 8 (analog output+) - pin 15 (GND)

9.1. Pressure conversion equation

Convert the analog output to pressure with the following equation.

$$P = 10^{(V - 7.25) / 0.75 + k} \quad \Leftrightarrow \quad V = 7.25 + 0.75 \times (\log P - k)$$

P: Pressure V: Output voltage [V] k : Pressure unit dependent

Puressure Unit	k (Pressure unit dependent)
Pa	2
Torr	-0.1249
mbar	0

9.2. SH2 independent mode analog output

The analog output that can occur in several states during measurements is shown in Table 9-1.

Table 9-1 Analog output states

Operating state	Analog output voltage
Filament off	9.9 V or higher
During normal measurements	Voltage corresponding to the measured pressure 0.27 to 6.5 V
SH2 error (Errors such as a filament break)	9.9 V or higher
Power supply voltage abnormality, sensor unit fault, etc.	0.1 V or less

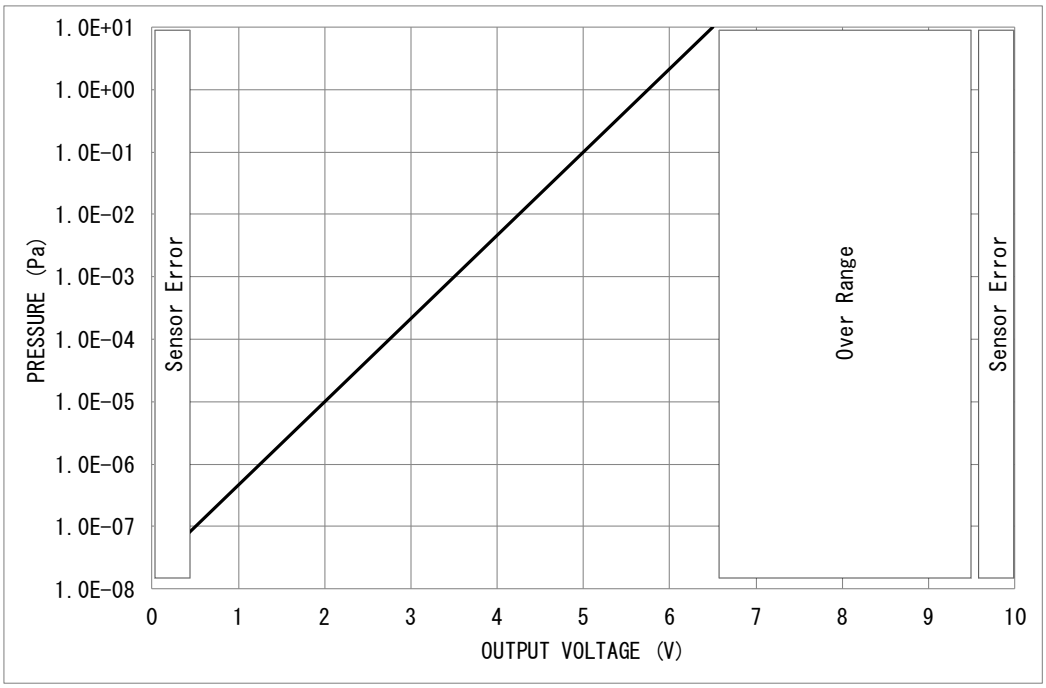

9.3. SPU combination mode analog output

The analog output that can occur in several states during measurements is shown in Table 9-2.

Table 9-2 Measurement value output states

Operating state	Analog output voltage
During normal measurements	Voltage corresponding to the measured pressure 0.27 to 8.75 V
$1x10^{+4}$ Pa or higher	8.75 V
SH2 error (Errors such as a filament break)	Voltage corresponding to the measured by SPU 5 V to 8.75V
Ionization gauge FIL OFF	Voltage corresponding to the measured by SPU 5 V to 8.75V
SPU error (Errors such as a filament break)	9.9 V or higher
Power supply voltage abnormality, sensor unit fault, etc.	0.1 V or less

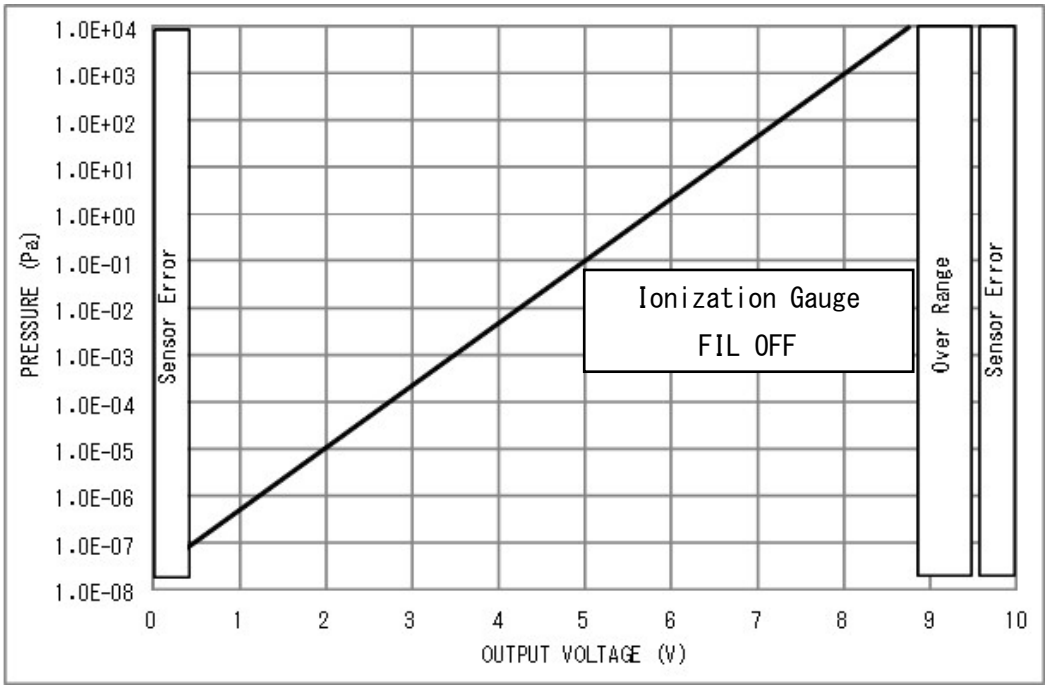

* Error is output even if SPU error.
However, the ionization gauge error is cleared by turning FIL off.

9.4. SAU combination mode analog output

The analog output that can occur in several states during measurements is shown in Table 9-3.

Table 9-3 Analog output states

Operating state	Analog output voltage
During normal measurements	Voltage corresponding to the measured pressure 0.27 to 9.5 V
Atmospheric pressure or higher	9.5 V or higher
Ionization gauge FIL OFF	When SWU is connected: SWU/SAU measurement pressure range 4.25V to 9.5V When SPU is connected: SPU/SAU measurement pressure range 5V to 9.5V
SH2 error (Errors such as a filament break)	When SWU is connected: SWU/SAU measurement pressure range 4.25V to 9.5V When SPU is connected: SPU/SAU measurement pressure range 5V to 9.5V
SPU error (Errors such as a filament break)	Voltage corresponding to the measured by SAU 8.677 V to 9.5V
SAU error	9.9 V or higher
Power supply voltage abnormality, sensor unit fault, etc.	0.1 V or less

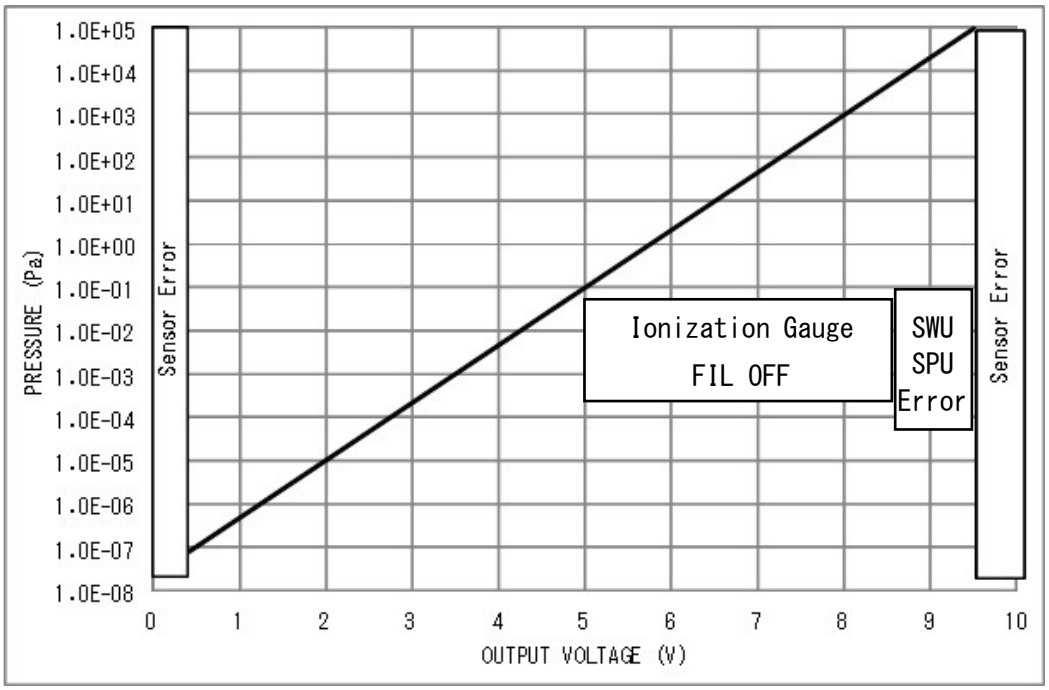

* Error is output even if a SAU or SPU error.
However, the ionization gauge error is cleared by turning FIL off.

9.5. SWU combination mode analog output

The analog output that can occur in several states during measurements is shown in Table 9-4.

Table 9-4 Analog output states

Operating state	Analog output voltage
During normal measurements	Voltage corresponding to the measured pressure 0.27 to 9.5 V
$1x10^{+5}$ Pa or higher	9.5 V
SH2 error (Errors such as a filament break)	Voltage corresponding to the measured by SWU 5 V to 9.5 V
Ionization gauge FIL OFF	Voltage corresponding to the measured by SWU 5 V to 9.5 V
SWU error	9.9 V or higher
Power supply voltage abnormality, sensor unit fault, etc.	0.1 V or less

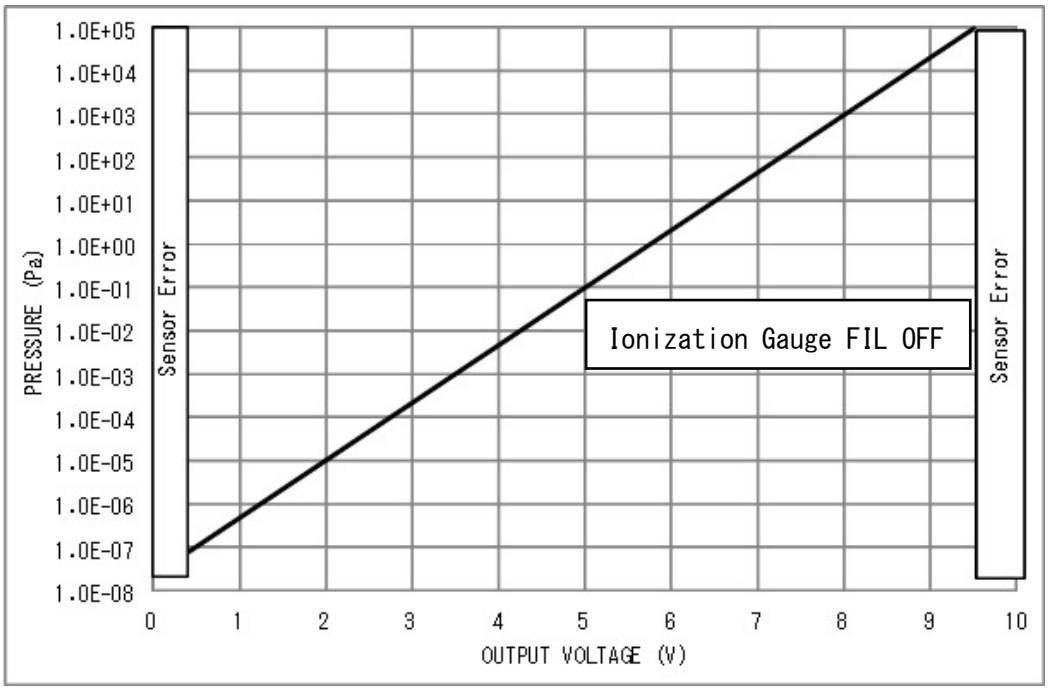

* Error is output even if a SWU error.
However, the ionization gauge error is cleared by turning FIL off.

9.6. Simple conversion tables

Exponent (Pa)	Analog output (V)
0E-08	-0.250
E-07	0.500
E-06	1.250
E-05	2.000
E-04	2.750
E-03	3.500
E-02	4.250
E-01	5.000
E+00	5.750
E+01	6.500
E+02	7.250
E+03	8.000
E+04	8.750
E+05	9.500

Mantissa (Pa)	Analog output (V)
1.0E-N	0.000
1.5E-N	0.132
2.0E-N	0.226
2.5E-N	0.298
3.0E-N	0.358
3.5E-N	0.408
4.0E-N	0.452
4.5E-N	0.490
5.0E-N	0.524
5.5E-N	0.555
6.0E-N	0.584
6.5E-N	0.610
7.0E-N	0.634
7.5E-N	0.656
8.0E-N	0.677
8.5E-N	0.697
9.0E-N	0.716
9.5E-N	0.733
10.0E-N	0.750

To find the analog output voltage when the pressure is 5E+1 Pa.

From the left table, voltage when 1E+1 Pa: 6.5 V

From the right table, voltage when 5E-N Pa: 0.524 V

Therefore, 6.5 V + 0.524 V = 7.024 V.

9.7. BMR2 Compatible mode (MODE 9)

9.7.1. Pressure conversion equation

Convert the analog output to pressure with the following equation.

$$P = 10 \times (V - E) \times 10 \wedge (E - 8)$$

P: Pressure [Pa]
V: Output voltage [V]
E: Value of V from which decimal place is omitted [V]

Calculated value of V-E can be less than 0.1 depending on the output accuracy of this product or the accuracy of the apparatus which reads in. In that case, Pressure value is calculated one digit smaller according to above equation. Thus, when the calculated value of V-E becomes less than 0.1, please convert to pressure value rounding it up into 0.1

Status	Measurement value output voltage
Filament ON [Em. Valid OK]	Voltage corresponding to the measured pressure
When pressure protection is actuated (Filament OFF)	More than 9.9V
When the pressure has become lower than the lower limit of measurable pressure (5.0×10^{-8} Pa)	Less than 0.5V
Filament OFF	More than 9.9V

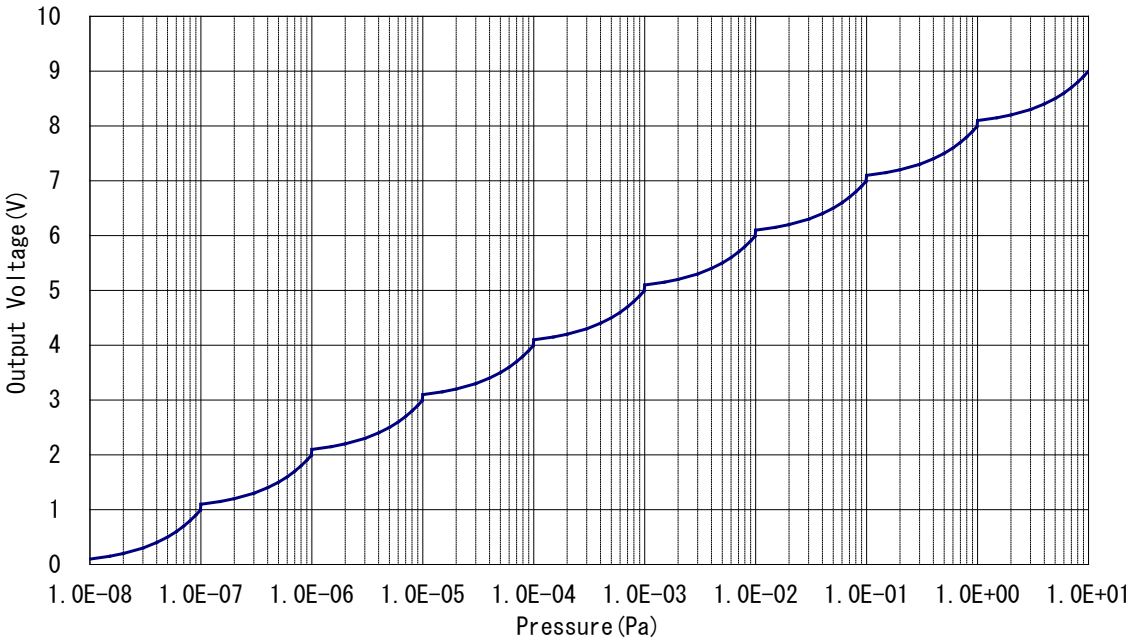

10. Control Output Signals

This chapter describes signals output from the SH2.

For the Standard Type, signals are output with an open collector. For the SH2-2 Serial Communications Type, signals are output with serial communications.

10.1. Control output signals (SH2-1 only)

Sensor error and setpoint signals are output from this unit's I/O connector in open collector format.

Photocoupler rating: 30 V_{MAX}, 50 mA_{MAX}, 70 mW

The internal circuitry is shown in Figure 10-1 SH2-1 output signal internal circuit diagram.

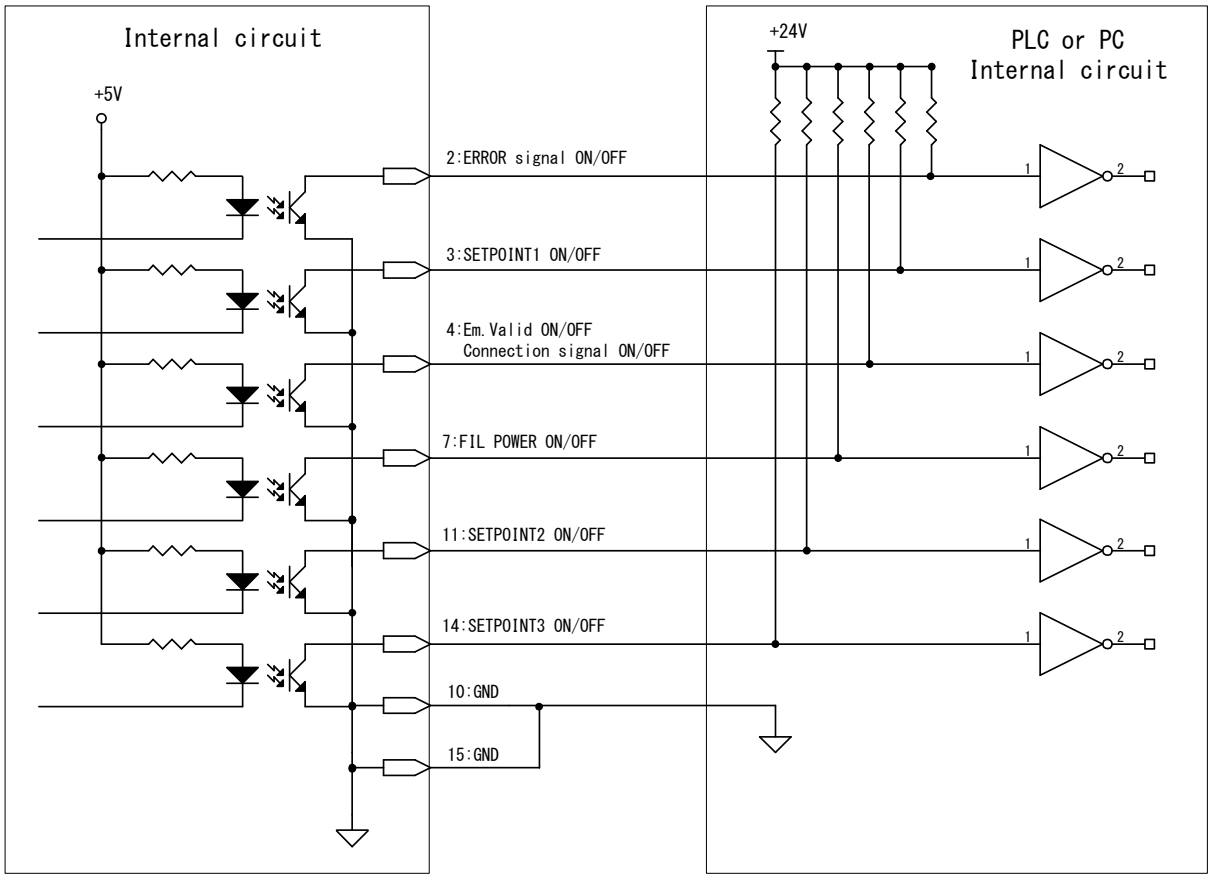

Figure 10-1 SH2-1 output signal internal circuit diagram

10.2. Serial communications signals (SH2-2 only)

Check the status high/low signal. For details, see the serial communications chapter.

10.3. Sensor error signal (SH2-1 only)

Sensor errors are signals that are output when an error occurs on this units.

When a sensor error occurs, the signal becomes low output.

When a sensor error occurs, the POWER/ERROR LED turns red and the pressure signal output becomes 9.9 V or higher.

10.3.1. SH2 independent mode

Error details	POWER LED	LED states	I/O	Comments
SH2-1/2 internal voltage abnormality	Red on	All LEDs off	No.2: low output	
Grid voltage abnormality	Red on	FIL LED 1 sec. flashing	No.2: low output No.4: high output	Error reset with FIL OFF
Filamen break error				
Pressure protection	Red on	FIL LED 3 sec. flashing	No.2: low output No.4: high output	

10.3.2. SPU combination mode

Error details	POWER LED	LED states	I/O	Comments
SH2-1/2 internal voltage abnormality	Red on	All LEDs off	No.2: low output	
Grid voltage abnormality	Red on	FIL LED 1 sec. flashing	No.2: low output No.4: high output	Error reset with FIL OFF
Filament break error				
SPU power supply abnormality Unit cable abnormality	Red on	SPU LED Flashing	No.2: low output No.4: high output	Output 9.9 V or higher
Pirani vacuum gauge filament break				

10.3.3. SAU combination mode

Error details	POWER LED	LED states	I/O	Comments
SH2-1/2 internal voltage abnormality	Red on	All LEDs off	No.2: low output	
Grid voltage abnormality	Red on	FIL LED 1 sec. flashing	No.2: low output No.4: high output	Error reset with FIL OFF
FIL break error				
SPU power supply abnormality Unit cable abnormality	Red on	SPU LED Flashing	No.2: low output No.4: high output	Outputs SAU pressure
Pirani vacuum gauge Filament break				
SAU power supply fault Unit cable abnormality	Red on	SAU LED Flashing	No.2: low output No.4: high output	Output 9.9 V or higher

10.3.4. SWU combination mode

Error details	POWER LED	LED states	I/O	Comments
SH2-1/2 internal voltage abnormality	Red on	All LEDs off	No.2: low output	
Grid voltage abnormality Filament break error	Red on	FIL LED 1 sec. flashing	No.2: low output No.4: high output	Error reset with FIL OFF
SWU power supply abnormality Unit cable abnormality	Red on	SPU LED Flashing	No.2: low output No.4: high output	Output 9.9 V or higher

10.4. Setpoint operation signal (SH2-1 only)

CAUTION	**Set point signal** When set point is set, external I/O output gets Lo/Hi (ON/OFF) linking flash of LED of each set point.

The setpoint is a function that outputs an external signal and illuminates LEDs when the pressure falls below the configured pressure. The configured pressure value is called the setpoint. This signal is output as low when the measured pressure value falls below the setpoint.

For how to configure the setpoints, see Section 11.

10.5. Emission valid signal and Connection check signal (SH2-1 only)

When this signal switches off (high), this unit cannot accurately measure pressure. The pressure is output as a reference value, but the setpoints do not operate.

10.5.1. Emission valid signal (SH2-1 only)

The emission valid signal is a function that outputs a signal as on (low) when the ionization gauge emission current is within the specified range. When this signal switches off (high), the emission current has exceeded the specified range, so this unit cannot accurately measure pressure. When this signal switches off (high), assume that the filament has been consumed (operating life) or some effect from contamination, so replace the gauge head.

10.5.2. Connection check signal (SH2-1 only)

The connection check signal becomes the signal confirming that SPU/SWU and SAU are connected. When SPU, SWU and SAU are not connected in a combination mode, it becomes OFF(Hi).

10.5.3. The difference of mode setting (SH2-1 only)

The output of this signal varies according to mode setting.

Mode setting	Emission current of ionization gauge		SPU/SAU/SWU Operating normally
	normal	abnormal	
0 / 3 / 4	ON(Lo)	OFF(Hi)	OFF(Hi)
1 / 2	ON(Lo)	OFF(Hi)	ON(Lo) ※

※When SWU, SPU or SAU is abnormality, then this signal and error signal are OFF(Hi).

10.6. Filament power monitor signal (SH2-1 only)

The filament power monitor signal is a function that outputs a signal as on (low) when the power supplied to the ionization gauge filament has exceed the specified value range. This is a guide that the filament is approaching the end of its operating life due to filament consumption. Refer section 12.

11. Configuring the Setpoints (SH2-1 only)

⚠CAUTION	**Setting of set point** Output of set point and pressure signal comes from same terminal. It may cause misreading. When you change set point value while the system is running, please pay attention not to proceed in running mode.
⚠CAUTION	**Set point signal** When set point is set, external I/O output gets Lo/Hi (ON/OFF) linking flash of LED of each set point.

The setpoint is a function that outputs an external signal and illuminates LEDs when the pressure falls below the configured pressure. The configured pressure value is called the setpoint.

To use a setpoint, follow this explanation and configure the necessary items.

On the SH2-1, setpoint 1, 2, and 3 are all set to around $5x10^{-5}$ Pa (approx. 2.5 V) as the factory default.

11.1. Setpoint setting pressure

⚠CAUTION	**Configuration of setpoint under 10 Pa.** When emission current abnormity of ionization gauge occurred, setpoint which is configured under 10Pa gets OFF. Please be cautious, for instance when setpoint is configured at 9 Pa, it gets OFF even tried to turn ON by pirani gauge after emission current abnormity of ionization gauge occurs.

Pressure range which setpoint operate for pressure sensor, pirani gauge and ionization gauge is described in the following table.

Type name	Setpoint setting pressure	remarks column
SAU	$1\times10^{+4}$Pa～$1\times10^{+5}$Pa	
SPU※1	$1\times10^{+1}$Pa～$1\times10^{+4}$Pa	automatic switch
SPU※2	4×10^{-1}Pa～$1\times10^{+4}$Pa	the condition filament of ionization gauge is forcibly OFF
SH2	5×10^{-8}Pa～$1\times10^{+1}$Pa	
SWU※1	$1\times10^{+1}$Pa～$1\times10^{+5}$Pa	automatic switch
SWU※2	1×10^{-2}Pa～$1\times10^{+5}$Pa	the condition filament of ionization gauge is forcibly OFF

※1: When automatic switch is used, filament of ionization gauge gets ON at 2 Pa, and OFF at 3 Pa. Please be cautious, for instance when setpoint is configured 9 Pa, it gets OFF even tried to turn ON by pirani gauge after "emission current abnormity" of ionization gauge occurs.

※2: Even when it is used under the condition filament of ionization gauge is forcibly OFF, setpoint can be operated down to 0.4 Pa by SPU, 0.01 Pa by SWU. If emission current abnormity is occurred when filament of ionization gauge is ON, sepoint configured under 10 Pa gets OFF. Also, when the filament gets OFF forcibly, setpoint for SWU/SPU can be ON.

11.2. Setpoint on/off pressure

The pressure to turn on the setpoint and the pressure to turn it off possess hysteresis.

On pressure value: setting

Off pressure value: setting + 10%

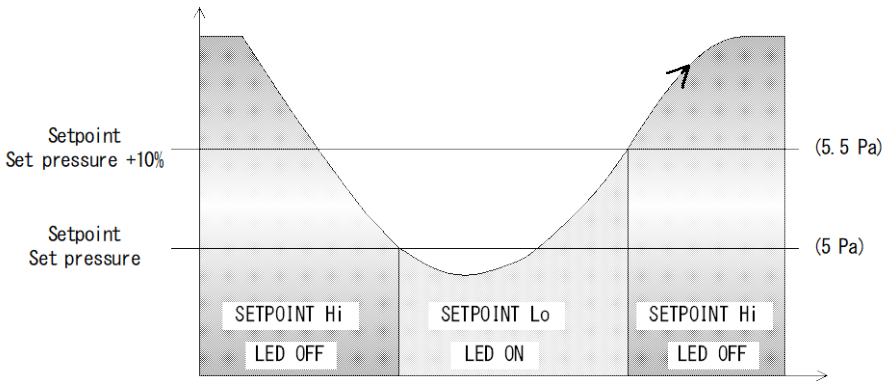

11.3. Configuring the setpoints

Analog output becomes the setpoint adjustment voltage mode by pressing the "SELECT" button. The setpoint adjustment voltage changes between 0.27 and 9.5 V.

Coarse adjustment: Push the <ADJ> button and keep it depressed, the setpoint value sweeps.

Fine adjustment: Push the <ADJ> button at short time, the setpoint value changes by one unit.

When the voltage reaches the voltage you wish to set, press the " SELECT " button to set it.

11.4. Switching the voltage mode

Measured pressure value output

"SELECT" button

Setpoint 1 adjustment voltage output, "SET-1" LED on

"SELECT" button

Setpoint 2 adjustment voltage output, "SET-2" LED on

"SELECT" button

Setpoint 3 adjustment voltage output, "SET-3" LED on

"SELECT" button

11.5. Pressure conversion equation

The pressure conversion equation is the same conversion equation as the pressure signal.

$P = 10^{(V - 7.25) / 0.75 + 2}$ ⇔ $V = 7.25 + 0.75 \times (\log P - 2)$

P: Pressure [Pa] V: Output voltage [V]

12. Filament Power Monitor Signal

The filament power monitor signal is a function that outputs a signal as on (low) when the power supplied to the ionization gauge filament has exceed the specified value range. This is a guide that the filament is approaching the end of its operating life due to filament consumption.

There are large differences in filament operating life due to the operating environment and other factors, so as one indicator, consider the operating life as approximately 1/10th of the time from when the filament was new until this signal was output. However, once this signal is output, the operating life accelerates, so use your own judgment for the operating environment.

In environments where you are using active gases, the remaining operating life is several weeks. In environments where the filament is always used in a high vacuum, the remaining operating life is about one year.

12.1. Confirmation of the SH2-2

Input the command with serial communications.

13. Adjusting SAU Pressure

CAUTION	**Tolerance of SAU at altitude and atmospheric depression.** The atmospheric and 0 point adjustment is required at the altitude of more than 500m around and at atmospheric depression lower than 950hPa. Without the adjustment, pressure indication will not decrease from 1.2 x 10^{+4}Pa.

You can take even more accurate measurements by adjusting the atmospheric pressure and zero pressure for the SAU.

Before using a new SAU, or when you see a deviation reading, adjust this unit following procedure below.

13.1. Adjusting on the SH2-1

The adjustment range of atmospheric pressure is output voltage of 0.1 to 2.2V in SAU gauge. Converting to pressure rate is 1.2 x 10^{+5} to 7.1 x 10^{+4}Pa. Adjustment can't be done when the range is exceeding above atmospheric pressure range.

(1) Press the "ADJ" button.
(2) Check that the SAU LED is flashing.
(3) Press the "ADJ" button.
You can cancel the adjustments by pressing the "SELECT" button when the SAU LED is flashing.
(4) When POWER LED is off, the flashing LED of SAU will light up. Make sure that the pressure indicates 1E+5Pa. When SAU LED flash means that pressure rate is out of atmospheric adjustment area.

13.2. Adjusting on the SH2-1

The adjustment range of 0 point is capable when SPU pressure display is less than 1,000Pa.
If pressure inside the chamber is unknown, check the pressure changing from triple combination (SAU) mode to combination (SPU) mode and then after proceed the 0 point adjustment.

(1) Press the "ADJ" button.
(2) Check that the SAU LED is flashing.
(3) Press the "ADJ" button.
You can cancel the adjustments by pressing the "SELECT" button when the SAU LED is flashing.
(4) When POWER LED is off, the flashing LED of SAU will light up. If SAU LED is off, the range of 0 point is out of the settable range.

13.3. Adjusting on the SH2-2

Input the command with serial communications.

14. Adjusting SWU Pressure

You can take even more accurate measurements by adjusting the atmospheric pressure and zero pressure for the SWU.

Before using a new SWU, or when you see a deviation reading, adjust this unit following procedure below.

14.1. Adjusting on the SH2-1

The adjustment range of atmospheric pressure is 1.0 x 10^{+3} to 1.0 x 10^{+5}Pa. Adjustment can't be done when the range is exceeding above atmospheric pressure range.

(1) Press the "ADJ" button.

(2) Check that the SAU LED is flashing.

(3) Press the "ADJ" button.

You can cancel the adjustments by pressing the "SELECT" button when the SAU LED is flashing.

(4) When POWER LED is off, the flashing LED of SAU will light up. Make sure that the pressure indicates 1.0 x 10^{+5}Pa. When SAU LED flash means that pressure rate is out of atmospheric adjustment area.

14.2. Adjusting on the SH2-1

Adjusted automatically. (Less than 1.0x10^{-3}Pa)

14.3. Adjusting on the SH2-2

Input the command with serial communications.

15. Using Serial Communications (SH2-2 only)

CAUTION	**Caution when laying down cables** When laying down a communications transmission line to the equipment, do not wire it in proximity or parallel to electrical lines, power lines, high voltage lines, or high frequency lines. There is a risk of malfunction.
CAUTION	**Remote host noise resistance** Use highly noise resistant insulated-type PC and PLC (programmable logic controller) remote hosts. There is a risk of malfunction and faults.

This section describes about RS-485 and RS-232C serial communications for the SH2-2 Serial Communications Type.

15.1. Serial communications specification

RS-485	RS-232C
2-wire	
Half duplex	Full duplex
Asynchronous	
ASCII code	
Data bit length 8 bits	
Stop bit 1 bit	
No parity	
Maximum cable length 1200 m *1	Maximum cable length 15 m
Maximum connections 32 (including host)	Maximum connections 1
9600/19200/38400 bps	9600/19200/38400 bps

*1: Communication is possible up to 1200 m in the RS-485 standard.
When using a cable that exceeds 30 m, first check the specifications for the remote host and check the operating environment for noise and other conditions.

*2: Switch to the receive state within 20 ms after sending data.

*3: Set the timeout until receiving data to 150 ms or higher.

*4: After receiving data, wait 50 ms or longer before sending the next data.

15.2. Settings

15.2.1. Wiring diagram

15.2.1.1. RS-232C wiring diagram

The diagram below shows an example RS-232C connection. The host side is D-sub 9-pin

Sensor pin #			Host pin #	
RxD	4	╳	2	RxD
TxD	6		3	TxD
GND	14	———	5	GND

15.2.1.2. RS-485 no terminal resistance (example)

For RS-485 wiring, the diagram below describes the National Instruments USB Serial Interface USB-485 as an example.

Sensor pin #		Host	
RS-485+	12	4	RxD+
		8	TxD+
RS-485-	10	5	RxD-
		9	TxD-
GND	15	1	GND

15.2.1.3. RS-485 with terminal resistance (example)

For RS-485 wiring, the diagram below describes the National Instruments USB Serial Interface USB-485 as an example.

When there are many RS-485 connections, when the total length of the connection cables is over 15 m, or when there are frequent communications errors, attach a terminal resistor to the terminal device.

Sensor pin #		Host	
RS-485+	12	4	RxD+
		8	TxD+
RS-485-	10	5	RxD-
		9	TxD-
GND	15	1	GND
Terminal resistor	5		
RS-485+	13		

15.2.2. Baud rate setting

Change the "bps" setting on this unit body as described below.

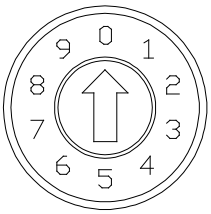

Baud rate	Switch #
9600 bps	0
19200 bps	1
38400 bps	2

15.2.3. Address setting

Set the address for the device with "MSD" and "LSD" on this unit body.

MSD	LSD
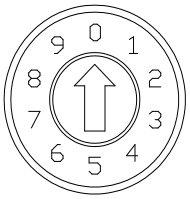	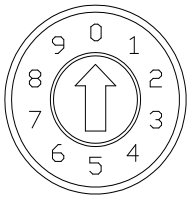
Upper address [AD0], 10s place	Lower address [AD1], 1s place
Decimal 0 to 9	Decimal 0 to 9

- The configuration range is 00 to 99. Caution: For RS-485, 00 is allocated to the host.
- The maximum number of connections for a single RS-485 line is 32 including the host.
- This setting is always valid.
- This address number is used even with RS-232C.

15.3. Basic data format

The basic data format for sending and receiving data is described below.

:	AD0	AD1	CMD	D0	.....	Dn	SH	SL	CHKH	CHKL	CR

:	Colon
AD0	Device address, upper (0 to 9)
AD1	Device address, lower (0 to 9)
CMD	Command (case sensitive)
D0	Data
Dn	Data
SH	Status upper
SL	Status lower
CHKH	Checksum upper (0 to 9, A to F)
CHKL	Checksum lower (0 to 9, A to F)
CR	Carriage return

- Commands are composed of upper case and lower case alphanumeric characters.
- The checksum is an exclusive OR (XOR) of AD0 to SL. Convert with hexadecimal ASCII codes.

15.3.1. Command list

Command	Description	Command	Description
D	Read measurement value, status	1R	Read setpoint 1 setting
ATM	SPU/SWU Adjust atmospheric pressure	2R	Read setpoint 2 setting
ZER	SPU Adjust zero pressure	1W	Write setpoint 1 setting
SR	Read status	2W	Write setpoint 2 setting
SW	Write status	ERR	Check error details
FIL	Check filament current value	T	Model, software version

15.3.2. Normal command reception

When a command was received normally, the response is the following.

Pressure value response

:	AD0	AD1	D	X	.	X	X	E	±	X	X	SH	SL	CHKH	CHKL	CR

Write setpoint and adjustment response

:	AD0	AD1	o	CHKH	CHKL	CR

- "o" is a lowercase character.

15.3.3. Abnormal command reception

When the operation specified by the command could not be performed, the command was not normally received, or there was no command, the response is the following.

:	AD0	AD1	n	CHKH	CHKL	CR

- "n" is a lowercase character.

15.4. Command

15.4.1. Read measurement value, status

Command

:	AD0	AD1	D	CHKH	CHKL	CR

Sensor -> PC response format

:	AD0	AD1	D	X	.	X	X	E	±	X	X	SH	SL	CHKH	CHKL	CR

- The measured pressure value goes in "X.XXE±XX".

  Example 1: 3.00E+03 → $3.00 \times 10^{+3}$

  Example 2: 5.00E+00 → $5.00 \times 10^{+0}$

  Example 3: 4.00E-01 → 4.00×10^{-1}
- "E.EEE+EE" response: Sensor error
- "F.FFE+FF" response: SH2 independent mode only, over measurement range, filament off
- For status "SH" and "SL", see the separate section.

15.4.2. Write status

Command

:	AD0	AD1	SW	SH	SL	CHKH	CHKL	CR

- For status "SH" and "SL", see the separate section.
- If the command was received normally, the normal reception "o" is returned.

15.4.3. Read status

Command

:	AD0	AD1	SR	CHKH	CHKL	CR

Sensor -> PC response format

:	AD0	AD1	S	SH	SL	CHKH	CHKL	CR

- For status "SH" and "SL", see the separate section.

15.4.4. Check error details

Command

:	AD0	AD1	ERR	CHKH	CHKL	CR

Sensor -> PC response format

:	AD0	AD1	ERR	##	CHKH	CHKL	CR

- "##" has the following meanings.

S0: Errors related to the SH2 unit including SH2-1/2 internal voltage abnormalities and short circuits on the output side
SG: Errors related to the grid including grid voltage abnormalities and short circuits on this unit side
SF: Errors related to the filament including emission current abnormalities
SB: Ionization gauge pressure filament breaks, etc
SP: Ionization gauge pressure protection, etc.
A0: SAU power supply, SAU unit cable abnormalities, etc.
P0: SPU power supply, SPU unit cable abnormalities, etc.
PF: SPU Pirani vacuum gauge filament breaks, etc.

15.4.5. SAU atmospheric adjustment command

Command

:	AD0	AD1	ATM	CHKH	CHKL	CR

- SAU atmospheric adjustment range: 7E+4 to 1.2E+5 Pa
- "o" is returned for a pressure that can be set.
- "n" is returned for a pressure that cannot be set.

15.4.6. SAU zero adjustment command

Command

:	AD0	AD1	ZER	CHKH	CHKL	CR

- SAU atmospheric adjustment range: SPU pressure under 1,000Pa
- "o" is returned for a pressure that can be set.
- "n" is returned for a pressure that cannot be set.

15.4.7. SWU atmospheric adjustment command

Command

:	AD0	AD1	ATM	CHKH	CHKL	CR

- SWU atmospheric adjustment range:1E+3 to 1E+5 Pa
- "o" is returned for a pressure that can be set.
- "n" is returned for a pressure that cannot be set.

15.4.8. Check ionization gauge filament current value

Command

:	AD0	AD1	FIL	CHKH	CHKL	CR

Sensor → PC response format

:	AD0	AD1	FIL	X	X	X	CHKH	CHKL	CR

- The value is returned in "XXX" with 100% as the maximum SH2 supply current.
- This value is larger when the emission current is 1 mA rather than 10 uA and this value gets larger the higher the pressure is. This value also differs according to the measured gas. The maximum may also not be 100% due to variations in the SH2 power supply.
- When the value is higher than 90% or lowers than 20%, the filament's operating life is approaching the end.

15.4.9. Read software version

Command

:	AD0	AD1	T	CHKH	CHKL	CR

Sensor → PC response format

:	AD0	AD1	T	S	H	2	3	1	5	CHKH	CHKL	CR

- The response indicates that "SH2" is the model name and "315" is software version 3.15.
- The software version may change without notification.

15.4.10. Read setpoint 1 setting

Command

:	AD0	AD1	1R	CHKH	CHKL	CR

Sensor → PC response format

:	AD0	AD1	1	X	.	X	X	E	±	X	X	CHKH	CHKL	CR

- The setting goes in "X.XXE±XX". "±" is either "+" or "-"

15.4.11. Read setpoint 2 setting

Command

:	AD0	AD1	2R	CHKH	CHKL	CR

Sensor → PC response format

:	AD0	AD1	2	X	.	X	X	E	±	X	X	CHKH	CHKL	CR

- The setting goes in "X.XXE±XX". "±" is either "+" or "-"

15.4.12. Write setpoint 1 setting

Command

:	AD0	AD1	1W	X	.	X	X	E	±	X	X	CHKH	CHKL	CR

- The setting goes in "X.XXE±XX". "±" is either "+" or "-"
- Value range: 5.00E-08 to 1.00E+05. When a value lowers than 5.00E-08 is set, the value is set to 5.00E-08. When a value higher than 1.00E+05 is set, the value is set to 1.00E+05.
- If the command was received normally, the normal reception "o" is returned.

15.4.13. Write setpoint 2 setting

Command

:	AD0	AD1	2W	X	.	X	X	E	±	X	X	CHKH	CHKL	CR

- The setting goes in "X.XXE±XX". "±" is either "+" or "-"
- Value range: 5.00E-08 to 1.00E+05. When a value lowers than 5.00E-08 is set, the value is set to 5.00E-08. When a value higher than 1.00E+05 is set, the value is set to 1.00E+05.
- If the command was received normally, the normal reception "o" is returned.

15.5. Checksums

Checksums are used to check if the sent data could be correctly received. This unit cannot receive commands if a checksum is not added.

The checksum calculation is an XOR (exclusive OR) of the data from the address to the character before the checksum.

Using Calculator included with Windows can be useful for calculating the checksum by hand. Select scientific or programmer for the calculator type and calculate the checksum in hex.

Example: When reading the measured value and status of address 11

The command and ASCII codes when reading the measured value and status of address 11 are listed below.

Command	:	**1**	**1**	**D**	CHKH	CHKL	CR
		↓	↓	↓			
ASCII		**31**	**31**	**44**	CHKH	CHKL	CR

"31" XOR "31" XOR "44" = 44

The result of calculating the XOR of the data from the address to the character before the checksum is 44.

Do not calculate the initial command character ":".

Therefore, the correct command is:

Command	:	1	1	D	4	4	CR
		↓	↓	↓	↓	↓	
ASCII		31	31	44	34	34	CR

Taking the measured value at this time as the string below:

Command	:	**1**	**1**	**D**	**1**	**.**	**0**	**0**	**E**	**+**	**0**	**5**	**F**	**6**	4	0	CR
		↓	↓	↓	↓	↓	↓	↓	↓	↓	↓	↓	↓	↓			
ASCII		**31**	**31**	**44**	**31**	**2E**	**30**	**30**	**45**	**2B**	**30**	**35**	**46**	**36**	34	30	CR

"31" XOR "31" XOR "44" XOR "31" XOR "2E" XOR "30" XOR "30"
XOR "45" XOR "2B" XOR "30" XOR "35" XOR "46" XOR "36"
= "40"

Therefore, when calculating the XOR from the address to the character before the checksum, the result is "40", and you can determine that the received data could be correctly received.

Do not calculate the initial command character ":".

15.6. Status settings list

This list shows the settings for filament on and degas on, as well as the status for errors and setpoints.

15.6.1. When writing the status

CAUTION	**Filament on/off signal** During SH2 independent mode and combination modes, the method for using the ionization gauge filament on/off signal differs.

SH (Status upper)

Bit	Status	0 (30H)	8 (38H)	C (43H)	4 (34H)	D (44H)	5 (35H)
B7	FIL 1/2	0	1	1	0	1	0
B6	FIL ON/OFF	0	0	1	1	1	1
B5	N·C	0	0	0	0	0	0
B4	DEGAS ON/OFF	0	0	0	0	1	1

FIL 1/2	1: FIL1	0: FIL2
* Ionization MODE FIL ON/OFF	1: On	0: Off
* Combinaton MODE FIL OFF/ON	1: Off	0: On
DEGAS ON/OFF	1: On	0: Off

SL (Status lower)

Bit	Status	0 (30H)
B3	N·C	0
B2	N·C	0
B1	N·C	0
B0	N·C	0

※ The N·C portions operate with either "1" or "0".

Example: Status when using filament 1 and turning the filament on

Bit	Status	C (43H)
B7	FIL 1	1
B6	FIL ON	1
B5	N.C	0
B4	DEGAS ON	0

Bit	Status	0 (30H)
B3	N.C	0
B2	N.C	0
B1	N.C	0
B0	N.C	0

Therefore, the command to send for address 11 is:

Command	:	AD0	AD1	SW	SH	SL	CHKH	CHKL	CR
		↓	↓	↓	↓	↓	↓	↓	
	:	1	1	SW	C	0	7	7	CR

15.6.2. When reading

CAUTION	**Filament on/off signal** During SH2 independent mode and combination modes, the method for using the ionization gauge filament on/off signal differs.
CAUTION	**The output of Em. Valid OK signal varies according to mode setting.** The output of Em. Valid OK signal varies according to mode setting. Please refer to section 10.5.

SH (Status upper)

Bit	Status	0 (30H)	4 (34H)	6 (36H)	5 (35H)	7 (37H)
B7	FIL 1/2	0	0	0	0	0
B6	FIL ON/OFF	0	1	1	1	1
B5	Em.Valid OK	0	0	1	0	1
B4	DEGAS ON/OFF	0	0	0	1	1

Bit	Status	8 (38H)	C (43H)	E (45H)	D (44H)	F (46H)
B7	FIL 1/2	1	1	1	1	1
B6	FIL ON/OFF	0	1	1	1	1
B5	Em.Valid OK	0	0	1	0	1
B4	DEGAS ON/OFF	0	0	0	1	1

FIL 1/2	1: FIL1	0: FIL2
* Ionization MODE FIL ON/OFF	1: On	0: Off
* Combination MODE FIL OFF/ON	1: Off	0: On
Em.Valid OK	1: OK	0: NG
DEGAS ON/OFF	1: On	0: Off

SL (Status lower)

Bit	Status	C (43H)	4 (34H)	6 (36H)	5 (35H)
B3	ERROR	1	0	0	0
B2	N·C	1	1	1	1
B1	SETPOINT2	0	0	1	0
B0	SETPOINT1	0	0	0	1

ERROR	1: ERROR	0: OK
SETPOINT2	1: On	0: Off
SETPOINT1	1: On	0: Off

* During ERROR, check the details of the error with the command.

Example: The status for address 11 was read and the response below was returned.

:	AD0	AD1	S	SH	SL	CHKH	CHKL	CR
	↓	↓	↓	↓	↓	↓	↓	
:	1	1	S	E	7	2	1	CR

Bit	E	Status
B7	1	FIL 1
B6	1	FIL ON
B5	1	Em.Valid OK
B4	0	DEGAS OFF

Bit	7	Status
B3	0	ERROR
B2	1	N·C
B1	1	SETPOINT2 ON
B0	1	SETPOINT1 ON

15.7. ASCII code chart

Dec	Hex	Char	Dec	Hex	Char	Dec	Hex	Char	Dec	Hex	Char
0	0x00	(nul)	32	0x20	(sp)	64	0x40	@	96	0x60	`
1	0x01	(soh)	33	0x21	!	65	0x41	A	97	0x61	a
2	0x02	(stx)	34	0x22	"	66	0x42	B	98	0x62	b
3	0x03	(etx)	35	0x23	#	67	0x43	C	99	0x63	c
4	0x04	(eot)	36	0x24	$	68	0x44	D	100	0x64	d
5	0x05	(enq)	37	0x25	%	69	0x45	E	101	0x65	e
6	0x06	(ack)	38	0x26	&	70	0x46	F	102	0x66	f
7	0x07	(bel)	39	0x27	'	71	0x47	G	103	0x67	g
8	0x08	(bs)	40	0x28	(	72	0x48	H	104	0x68	h
9	0x09	(tab)	41	0x29	)	73	0x49	I	105	0x69	i
10	0x0A	(lf)	42	0x2A	*	74	0x4A	J	106	0x6A	j
11	0x0B	(vt)	43	0x2B	+	75	0x4B	K	107	0x6B	k
12	0x0C	(ff)	44	0x2C	,	76	0x4C	L	108	0x6C	l
13	0x0D	(cr)	45	0x2D	-	77	0x4D	M	109	0x6D	m
14	0x0E	(so)	46	0x2E	.	78	0x4E	N	110	0x6E	n
15	0x0F	(si)	47	0x2F	/	79	0x4F	O	111	0x6F	o
16	0x10	(dle)	48	0x30	0	80	0x50	P	112	0x70	p
17	0x11	(dc1)	49	0x31	1	81	0x51	Q	113	0x71	q
18	0x12	(dc2)	50	0x32	2	82	0x52	R	114	0x72	r
19	0x13	(dc3)	51	0x33	3	83	0x53	S	115	0x73	s
20	0x14	(dc4)	52	0x34	4	84	0x54	T	116	0x74	t
21	0x15	(nak)	53	0x35	5	85	0x55	U	117	0x75	u
22	0x16	(syn)	54	0x36	6	86	0x56	V	118	0x76	v
23	0x17	(etb)	55	0x37	7	87	0x57	W	119	0x77	w
24	0x18	(can)	56	0x38	8	88	0x58	X	120	0x78	x
25	0x19	(em)	57	0x39	9	89	0x59	Y	121	0x79	y
26	0x1A	(sub)	58	0x3A	:	90	0x5A	Z	122	0x7A	z
27	0x1B	(esc)	59	0x3B	;	91	0x5B	[	123	0x7B	{
28	0x1C	(fs)	60	0x3C	<	92	0x5C	¥	124	0x7C	|
29	0x1D	(gs)	61	0x3D	=	93	0x5D	]	125	0x7D	}
30	0x1E	(rs)	62	0x3E	>	94	0x5E	^	126	0x7E	~
31	0x1F	(us)	63	0x3F	?	95	0x5F	_	127	0x7F	(del)

16. Gauge Head Replacement

WARNING	**Power off** When replacing the gauge head, always turn off the power supply. Do not turn on the power supply until finished replacing the gauge head. If the gauge head is attached or removed with the power on, there is a risk of damage to this unit and to devices connected to this unit and a risk of fire.

16.1. Tools

The necessary tool is a width across flats size 1.5 mm hex wrench.

16.2. Removing the sensor

If you loosen the sensor locking screw, you can remove the sensor. Slowly pull out the sensor.

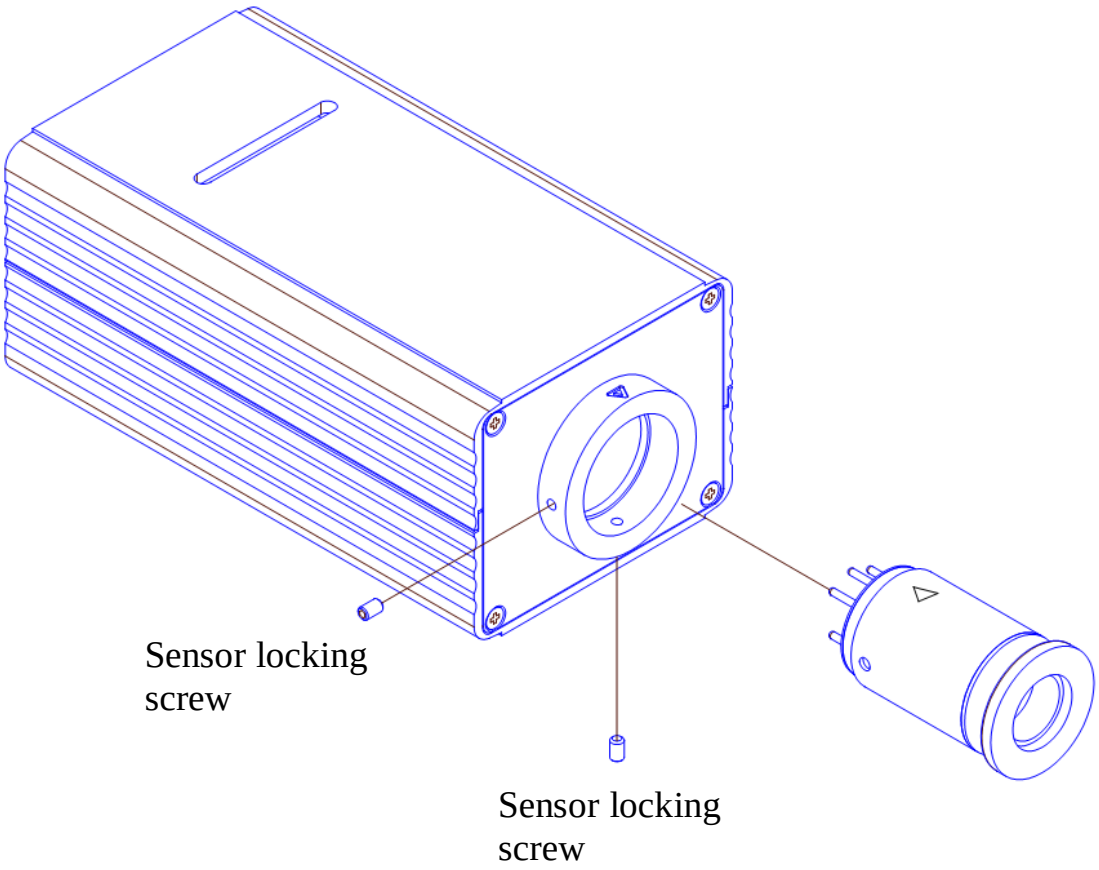

16.3. Attaching the sensor

Slowly insert the sensor into the controller. If inserted all at once, a strong force will be applied to the sensor which may cause it to leak or may damage the circuit board, so slowly insert it. When fully inserted, tighten the sensor locking screw.

16.4. Mesh/Baffle installation and removal.

16.4.1. Jig tool

A clean thin tip tweezers and clean gloves will be required as a Jig.

16.4.2. Removing mesh or baffle

Insert the tweezers into the gap of mesh and lift it slowly.

Procedure ①	Procedure ②	Procedure③
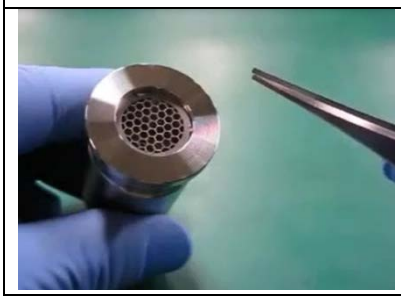		

16.4.3. Mesh/Baffle installation

Insert the mesh into the opening of sensor and push firmly to fix well.

Procedure ①	Procedure ②	Procedure ③
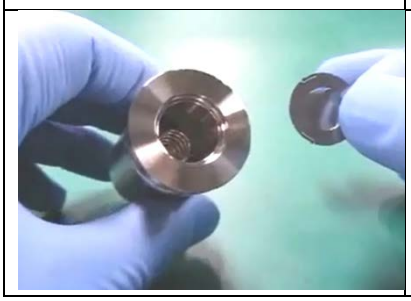	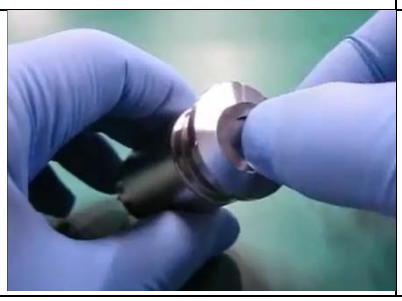	

16.5. Baffle (Option)

It is recommended to replace to baffle if there is a possibility that contamination/particle and/or electrically charged particles dive inside the sensor as shown in the table below.

Case	Recommend
Big contamination/particle	Mesh
Deposit materials (Optical dive)	Baffle
electrically charged particles	Baffle
Conductance (Ultimate pressure)	Mesh

17. Troubleshooting

17.1. Troubleshooting

Bad electrical wiring is a major cause of sensor malfunctions. If this unit behaves in a manner you find unusual, first check the items below.

(1) Wiring between this unit and remote host
(2) Wiring between this unit and the display unit (when using a display unit)
(3) Signal short/open

When using a display unit, please refer to its instruction manual as well. Also check if this unit can operate independently. If this unit is capable of measuring independently, the cause of the problem may be elsewhere.

● The POWER LED is off even though power is being supplied	
Cause	Action
Miswired or broken power supply cable	Repair the wiring and check continuity with a tester.
The power supply voltage is not within the specified range	Check the power supply voltage with a tester.
Internal circuit fault	Requires inspection and repairs at ULVAC.

● The POWER LED is on but this unit is outputting 0 V	
Cause	Action
Miswired or broken cable	Repair the wiring and check continuity with a tester.
The power supply voltage is not within the specified range	Check the power supply voltage with a tester.
Internal circuit fault	Requires inspection and repairs at ULVAC.

● This unit is continuously outputting a voltage of 9.9 V or higher or continuously outputting the error signal	
Cause	Action
Filament is open.	Check continuity between filament and electrode by a circuit tester. ⇒Replace the gauge head when there is a break.
The gauge head is not attached	Attach the gauge head.
The filament is short circuiting with the case	Measure insulation between each pin and the case. ⇒Replace the gauge head when there is a drop in insulation.
Internal circuit fault	Requires inspection and repairs at ULVAC.

● This unit does not output around 9.5 V even at atmospheric pressure	
Cause	Action
The atmospheric pressure adjustment has deviated	See section 13 and adjust atmospheric pressure.

● FIL LED flashes, Filament gets ON/OFF

Cause	Action
Filament is open.	Check continuity between filament and electrode by a circuit tester. ⇒Replace the gauge head when there is a break.
The gauge head is dirty Sensitivity has dramatically deviated	Replace the gauge head with another gauge head and check the phenomena. If there is no problem with the other gauge head, the gauge head was the problem.
Lower than DC20V of power supply voltage	Please check power supply voltage by tester. (Power supply voltage: DC20V~DC28V) Due to lack of power to filament, an error of emission current occurs. Please confirm the voltage is more than DC20V especially when filament is on.

● The pressure reading does not show a steady value.

Cause	Action
The pressure is actually fluctuating	This is normal.
This unit is affected by pump vibrations and is fluctuating	Suppress vibrations as much as possible. Measurements are affected by the principle of the Pirani vacuum gauge. In particular, it is easily affected on the atmospheric pressure side.
This unit is attached to a location with a gas flow	Attach this unit to a location with no gas flow. Measurements are affected by the principle of the Pirani vacuum gauge. In particular, it is easily affected on the atmospheric pressure side.
The environmental temperature is fluctuating	Wait for the environmental temperature to stabilize. Measurements are affected by the principle of the Pirani vacuum gauge.
High temperature or low temperature gases are flowing into this unit	Implement corrective action such as attaching the gauge head to a location unaffected by gas temperature. Measurements are affected by the principle of the Pirani vacuum gauge.
Dirty gauge head interior	Replace the gauge head
Affected by moisture and dirt	Attach the gauge head to a location as unaffected as possible Influenced by heat of vaporization by gradual vaporization.
There is a leak in the gauge head or the area where the gauge head is attached	Gauge head leak ⇒ Replace the gauge head
	Other leaks ⇒ Stop the leak
Bad cable contact, increased wire resistance	Check the cable connection and resistance.
The cable is affected by electromagnetic induction. (By external noise)	Change the cable installation location. Use this unit with the device generating the noise turned off.
	Review how the cables are installed
	Examine separate measures for noise

The filament is short circuiting with the case	Measure insulation between each pin and the case. ⇒Replace the gauge head when there is a drop in insulation.

● The pressure is changing but the pressure reading is stable.

Cause	Action
Miswiring or cable break between this unit and remote host	Repair the wiring and check continuity with a tester.
The power supply voltage is not in the specified range	Check the power supply voltage with a tester.
The pressure is below the specified range	Normal
The pressure is above the specified range	Normal
Nearby noise source	The CPU may be frozen ⇒Cycle the power.
The filament is short circuiting with the case	Measure insulation between each pin and the case. ⇒Replace the gauge head when there is a drop in insulation.

● At SAU/SWU combination mode: In case the salutation occurs around 1E+4Pa when pumping down is proceeded.

Cause	Action
High altitude or Low atmospheric pressure	Adjust the atmospheric and zero pressure. Refer to section13.
SAU contamination	To exchange the contaminated sensor with new one.
Sensor of SWU contamination	Replace the SWU sensor with new one.

● The output value greatly differs from the expected pressure

Cause	Action
The gauge head is dirty Sensitivity has dramatically deviated	Replace the gauge head with another gauge head and check the phenomena. If there is no problem with the other gauge head, the gauge head was the problem.
Measuring air at the nitrogen setting.	This is normal. When air is measured at the nitrogen setting, a pressure 60% higher is shown.
Environment with a large amount of moisture or oil	Attach the gauge head to a location as unaffected as possible Influenced by heat of vaporization by gradual vaporization.
The actual pressure differs	Check with another pressure gauge.
The atmospheric pressure adjustment has deviated	Adjust the atmospheric pressure
The filament is short circuiting with the case	Measure insulation between each pin and the case. ⇒Replace the gauge head when there is a drop in insulation.

● At combination mode: In case the salutation occurs around 1Pa when pumping down is proceeded.

Cause	Action
SH2 sensor (M-34, etc.) contamination.	To exchange the contaminated sensor head with new one.
SWU sensor (SWP), SPU sensor (WP) contamination.	Input a signal to turn the filament off and check the pressure only by pirani gauge SWU/SPU. Exchange the sensor in case the chamber is stated under the pressure of 0.4Pa and showing the pressure of more than 0.4Pa.

● Measurement value fluctuates.

Cause	Action
Contamination of sensor or significantly low sensitivity.	Check the symptom by replacing the sensor with another one. If the symptom is normal with another sensor head, the original sensor head is faulty.
Vibrating cable	If the cable is always subjected to vibration, the measurement value output may fluctuate due to frictional electromotive force in the cable. Re-examine the cable laying method.
Line voltage fluctuates.	Check line voltage by a circuit tester. (Line voltage: DC20V～DC28V)
Filament is ON at a pressure beyond measurement pressure range	Check pressure by another pressure gauge, such as Pirani gauge. If the pressure is too high, gas cannot be ionized normally and the ion current generated will be low as if the pressure is low. The filament protecting function is not actuated in this condition.
Ground potential fluctuates.	Check control ground and ground where the sensor head is mounted by a circuit tester, oscilloscope or the like. Take measures by improving ground wiring or by mounting either the controller or sensor afloat.
Leakage current due to insulation failure between sensor head electrodes.	Check insulation between the electrodes and between the external wall of the sensor head by a Megar. The Megar indication must be infinite. If insulation failure is found, replace the sensor head with a new one.

● Setpoint signal is not output.

Cause	Action
Emission valid signal becomes NG momentarily when the emission current of the sensor is between the normal value and abnormal value.	If emission current is NG momentarily, the setpoint will also be OFF. Replace the sensor.
Disconnection of the cable	Check continuity by a circuit tester. If the cable is faulty, replace or repair it.
Cannot be output as voltage because the unit is not connected to power through resistor.	The output form of this unit is open collector output. Signal cannot be detected unless the input of the interface is pulled up if the interface circuit of TTL level input is used.

● Cannot perform serial communications, occasionally no response	
Cause	Action
Miswired or broken cable	Repair the wiring and check continuity with a tester.
The baud rate, address are different	Match the baud rate, address
Only "n" is returned	Check the command and checksum
Terminal resistance not set on RS-485	If the cable is long and in noisy environments, set terminal resistance
Internal circuit fault	Requires inspection and repairs at ULVAC.
The cable is affected by electromagnetic induction (By external noise)	Change the cable installation location. Use this unit with the device generating the noise turned off.
The baud rate is slightly out of sync	Reduce the baud rate and check

17.2. Checking for an internal electrode break

The interior of the sensor is wired as shown in the figure below. Check continuity referring to this figure.

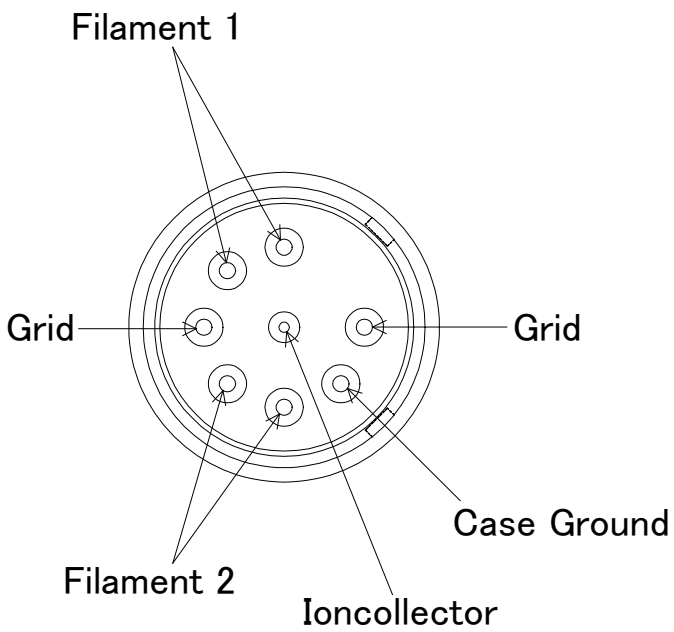

Figure 17-1 Sensor internal wiring diagram

17.3. Insulation between the sensor pins and the case

Excluding the sensor case ground and between the filament and grid pins, the insulation between the pins and case is 100 MΩ or higher and the withstand voltage is 100 VDC.

When insulation resistance drops because of contamination, the pressure reading is affected. The effect on the pressure reading differs by the location where insulation resistance has dropped.

18. Technical Report

18.1. Measurement principle

When gas molecules collide with particles that carry energy above a certain value, no matter what the substance, electrons are emitted and the gas molecules become ions. This is called gas ionization.

To ionize a gas, a filament is heated and something is used to accelerate the thermoelectrons produced from the filament. Because the collision frequency of these thermoelectrons and the gas molecules is proportional to the gas density, if ions are produced at a constant proportion by the collisions, we are able to know the gas molecule density (gas pressure) from the number of produced ions.

The below relationship holds true between the number of thermoelectrons emitted from the filament (emission current: Ie), the number of produced ions (ion current: Ii), and the gas molecule density (pressure: P).

$$Ii = S \times Ie \times P \qquad \text{------(1)}$$

Ii	: Ion current [A]
S	: Sensitivity [Pa^{-1}]
Ie	: Emission current [A]
P	: Pressure [Pa]

Sensitivity S in the equation above is determined by such factors as the construction and dimensions of the gauge head, conditions such as the voltage applied to the electrodes, and the type of measurement gas.

This sensor indicates a value for Ii in the equation above that is electrically amplified and calculated. Therefore, you can see that if sensitivity S changes, a difference in the vacuum gauge's measured value output will appear, even if emission current Ie and pressure P are the same. Typical causes for sensitivity S to change are listed below.

1) Gauge head type
2) Measurement gas type
3) Gauge head deterioration

The sensitivity for this sensor's gauge head in a nitrogen gas atmosphere is 0.06 Pa^{-1}.

18.2. Measurement gas type and relative sensitivity factor

This sensor has been adjusted to show the correct pressure for nitrogen gas.

Therefore, when measuring a gas atmosphere that is not nitrogen gas, an error will occur in that measured value output.

With that we will explain about correcting the measured value output difference by gas type.

If we set sensitivity $Srj(N_2)$ for nitrogen gas as the standard, sensitivity S is expressed with the kind of equation below.

$$S = Srj(N_2) \times Srj \qquad \text{------(2)}$$

S	: Sensitivity [Pa^{-1}]
$Srj(N_2)$	: Nitrogen gas sensitivity [Pa^{-1}]
Srj	: Relative sensitivity factor

If this equation is substituted into equation 1:

$$Ii = Srj(N_2) \times Srj \times Ie \times P \qquad \text{------(3)}$$

Here the ion current when there is nitrogen gas is set as $Ii(N_2)$

$$Ii = Srj \times Ii(N_2) \qquad \text{------(4)}$$

In the actual measured value output, a value of Srj (relative sensitivity factor) doubled will be shown for the correct value.

To correct the measured value output by gas type, you should divide the vacuum gauge measured value output by the relative sensitivity factor (absolute sensitivity to nitrogen gas) possessed by that gas according to equation 4.

Example: Measuring argon (Ar) gas with an ionization vacuum gauge

When the measured value output P(Ar) at this time was 5×10^{-6} [Pa], to find the actual pressure P [Pa]:

$$P = \frac{P(Ar)}{\text{Relative sensitivity factor of Ar}}$$

$$= \frac{5 \times 10^{-6}}{1.34}$$

$$= 3.7 \times 10^{-6} \text{ [Pa]}$$

Table 18-1 Ionization vacuum gauge relative sensitivity factor of gases to nitrogen and absolute ionization cross section

m/e	N	Molecule	Srj	Xj
4	2	He	0.221*	0.13±0.02
20	10	Ne	0.358*	0.25±0.05
40	18	Ar	1.34*	1.23±0.07
84	36	Kr	1.88*	1.84±0.06
132	54	Xe	2.50*	2.64±0.08
2	2	H_2	0.491*	0.38±0.04
4	2	D_2	0.40	0.41
15	10	NH_3	0.645*	1.23
18	10	H_2O	1.25±0.44	1.03
28	14	CO	0.95*	1.06±0.03
28	14	N_2	1.00	1.00
30	15	NO	1.17±0.11	1.24
32	16	O_2	0.879	0.96±0.07
		Air	0.97±0.1	0.75
34	18	H_2S	2.20±0.02	2.03±0.20
36	18	HCl	1.65±0.21	1.61±0.02
44	22	CO_2	1.35*	1.39±0.08
44	22	N_2O	1.66±0.27	1.30±0.17
146	70	Sfe	2.50	2.41
200	80	Hg	3.30±1.04	2.07±0.04
16	10	CH_4	1.58*	1.63±0.30
30	18	C_2H_6	2.58*	2.74±0.45
44	26	C_3H_8	3.44*	3.64±0.37
58	34	C_4H_{10}	4.04*	4.57±0.47
72	42	C_5H_{12}		5.60±0.76
86	50	C_6H_{14}	6.60	6.77±1.44
100	58	C_7H_{16}	7.60	7.72
114	62	C_8H_{18}		8.18
128	70	C_9H_{20}		8.86
26	14	C_2H_2	0.614*	2.06±0.27
28	16	C_2H_4	1.29*	2.27±0.28
42	24	C_3H_6	1.77*	3.25±0.22
56	32	C_4H_8	2.07*	3.82±0.59
70	40	C_5H_{10}		4.81±0.99
84	48	C_6H_{12}	6.37±0.86	6.49
112	64	C_8H_{16}		7.22
126	72	C_9H_{18}		8.72
140	80	$C_{10}H_{20}$		10.37
78	42	C_6H_6	5.18±0.42	5.19±0.50
42	24	Cyclo-C_3H_6		3.75
70	40	Cyclo-C_5H_{10}		6.01
84	48	Cyclo-C_6H_{12}	6.40	6.60±1.59
92	50	C_6H_5-CH_3	6.81	
40	22	CH_2-C-CH_2	1.31*	CH2=C=CH2
40	22	CH_3-C-CH	1.41*	CH3-C≡CH

Srj: Ionization vacuum gauge relative sensitivity factor
$Srj(N_2) = 1$ (actual measured value)

Xj: Absolute ionization cross section
$Xj(N_2) = 1$
Calculated value when the ionization electron energy is 75 eV

N: Number of electrons per molecule
There is a linear relationship between Srj and Xj. Srj for unknown gases can be calculated with Xj

Starred items (*) are contained in reference material 2.

Unfortunately, ULVAC does not have data for other gases.

1) F. Nakao. Vacuum 25 (1975) 201, 431
2) K. Nakayama and H. Hojo; Jpn. J. Appl. Phys. Suppl. 2 Pt. 1. (1974) 113

19. Warranty

This product was shipped after rigid company inspection. However, in case any failure occurs under ULVAC's responsibility, such as defect in manufacturing and damage during transportation, Buyer shall inform ULVAC, Inc. or the local ULVAC representatives. ULVAC will repair or exchange it at free of charge.

Warrantable Items

1) This unit
2) Sensor head on delivery

Duration of guarantee

Within 1 year from the date of delivery.

Warrantee scope

1) Domestic business in Japan: Product, which has damage, caused by a failure on delivery.
2) Direct export transaction: Product, which has damage, caused by a failure on delivery. The warrantee scope shall confirm to the new INCOTERMS.
3) Products not satisfying meet the standard specifications although the product is used under the normal service conditions such as temperature range and power etc.

Response procedure

1) Domestic business in Japan: ULVAC send a replacement or Buyer return the defective items to ULVAC, Inc. or to the local ULVAC representatives for repair. If field service is required, Buyer shall ask ULVAC, Inc. or the local ULVAC representatives.
2) Direct export transaction: ULVAC send a replacement or Buyer return the defective items to ULVAC, Inc. or to the local ULVAC representatives for repair. Return charge shall be paid by Buyer.

Disclaimer

1) Failure occurred after expiration of warranty period
2) Failure caused by force majeure, such as fire, storm and flood damage, earthquake, lightning strike, war etc
3) Failure occurred due to carelessness handling or faulty usage
4) Products remodeled, disassembled or repaired without ULVAC's acceptance
5) Failure occurred under abnormal environment, such as intense electromagnetic field, radiation, high-temperature, high-humidity, flammable gases, corrosive gases, dust etc.
6) Failure occurred by noise
7) Product deficiency or secondary damnification occurred to Buyer, from law suit to ULVAC by third party for patent infringement.
8) Sensor head being used (expiration of life, measurement error, etc.)
9) Sensor head cable in use (cable burnout due to improper installation, poor contact, etc.)

Others

1) In case, special agreement or memorandum for specifications is made individually, the descriptions are prior to this article "13 Product Warranty".
2) Buyer shall inform ULVAC when this product is exported out of Japan. In the meantime, Buyer shall take necessary procedures according to Foreign Exchange and Foreign Trade Law.
3) As for the question and consultation, Buyer shall check the model and serial number and ask the local representative or ULVAC, Inc.
4) The content of this document is subject to change without notice in future.

20. EC DECLARATION OF CONFORMITY

ULVAC

CE **Declaration of Conformity** CE

We, Company:ULVAC ,Inc.

of Address:2500 HAGISONO, CHIGASAKI, KANAGAWA, 253-8543 Japan.

This declaration is issued under the sole responsibility of the manufacturer.
In accordance with the following Directive:

EN IEC63000:2018 RoHS Directive (2011/65/EU)

declare under our sole responsibility that the product,

Type of Product	:	**Multi-Ionization gaude Sensor Unit**
Model Name	:	**SH2-1 / SH2-2 / ST2-1 / ST2-2**

to which this declaration related is in conformity with the following standards:

EN61326-2-3:2013
EMC Directive (2014/30/EU)
EN IEC61000-4-2:2008
Electrostatic Test
EN IEC61000-4-3:2006+A1:2007+A2:2010
Radiated Electromagnetic Field Test
EN IEC61000-4-4:2004+A1:2010
Transient Burst Test
EN IEC61000-4-6:2008
Conduction Test
EN IEC61000-4-8:2009
Commercial Magnetic Field Test
CISPR11:2009+A1:2010 Group 1 Class A
Radiation Field Intensity Measurement

following the provisions of

The person stated below will keep the following technical documentation:

- operating and maintenance instructions
- technical drawings
- description of measures designed to ensure conformity
- other technical documentation, e.g. quality assurance measures for design and production

Person authorized to compile the technical file:
(Name and address) Julian Weck
ULVAC GmbH, Klausnerring 4, 85551 Kirchheim b. München, Germany

9 Nov, 2022 Kanagawa , Japan	Toyoaki Nakajima Senior Manager of Components Division T. Nakajima
(date & place)	(name, function, signature)

Form:A00315287-01-01

21. UK DECLARATION OF CONFORMITY

ULVAC

UK CA **Declaration of Conformity** UK CA

We, Company:ULVAC ,Inc.

of Address:2500 HAGISONO, CHIGASAKI, KANAGAWA, 253-8543 Japan.

This declaration is issued under the sole responsibility of the manufacturer.
In accordance with the following Directive:

BS EN IEC63000:2018 RoHS Directive (2011/65/EU)

declare under our sole responsibility that the product,

Type of Product : Multi-Ionization gaude Sensor Unit

Model Name : SH2-1 / SH2-2 / ST2-1 / ST2-2

to which this declaration related is in conformity with the following standards:

BS EN61326-2-3:2013
EMC Directive (2014/30/EU)
BS EN IEC61000-4-2:2008
Electrostatic Test
BS EN IEC61000-4-3:2006+A1:2007+A2:2010
Radiated Electromagnetic Field Test
BS EN IEC61000-4-4:2004+A1:2010
Transient Burst Test
BS EN IEC61000-4-6:2008
Conduction Test
BS EN IEC61000-4-8:2009
Commercial Magnetic Field Test
BS CISPR11:2009+A1:2010 Group 1 Class A
Radiation Field Intensity Measurement

following the provisions of

The person stated below will keep the following technical documentation:

- operating and maintenance instructions
- technical drawings
- description of measures designed to ensure conformity
- other technical documentation, e.g. quality assurance measures for design and production

Person authorized to compile the technical file:
(Name and address) Julian Weck
ULVAC GmbH, Klausnerring 4, 85551 Kirchheim b. München, Germany

9 Nov, 2021
Kanagawa , Japan
(date & place)

Toyoaki Nakajima
Senior Manager of Components Division
(name, function, signature)

Form:A00315287-02-00

22. Certificate of Contamination

This is a request form for repair/inspection of ULVAC components/certificate of contamination.

Please enter the operating condition/trouble symptom of your vacuum gauge in this form and submit it to your local ULVAC service station or sales office after signing it.

Regarding vacuum gauges used for pumping toxic gas or gauges contaminated with substances produced by reaction, please consult with your local ULVAC service station or sales office before filling in this form.

To ULVAC, Inc. Date:

Person in charge you contacted:

Model name :

Model number :

Serial No. :

Application :

Repair/inspection requested _____

Trouble symptom _____

Note _____

Contaminant (Check an applicable box.)

☐ I guarantee that this vacuum gauge is not contaminated with harmful substances.

☐ This vacuum gauge is contaminated with the following harmful substances.

	Name of contaminant (molecular formula)	Characteristics
1		
2		
3		
4		
5		

Person in charge _____

Division _____

Name of company _____

Phone _____

Fax _____

E-mail _____

Please pack the product carefully before shipment because the shipper (user) is liable for damage that may be caused by contaminant in transit to ULVAC. It is also to be understood that ULVAC may decline to repair the product depending on the type of contaminant and degree of contamination and return it to the user.

To be filled in by ULVAC Request for MSDS: Yes/No	Received by	
ULVAC job No.		

23. China RoHS Declaration

This mark is applied to the electronic information product sold in the People's Republic of China. The figure at the center of the mark is the validity date of environmental protection. This product does not influence the environment, the human body and the property during the period reckoning the manufacturing date as long as the caution for safe use regarding the products are observed.
*The environmental protection validity date is not the product warranty period.

Table 22-1. Making format for names and contents of hazardous substances or elements

Name of parts	**Hazardous substances or elements**					
	Pb	**Hg**	**Cd**	**Cr^{6+}**	**PBB**	**PBDE**
Printed Circuit Board	X	O	O	O	O	O
Chassis	O	O	O	O	O	O
Connector	O	O	O	O	O	O
Label	O	O	O	O	O	O
Gauge Head	O	O	O	O	O	O

O: indicating that content of the hazardous substance or element in all homogeneous materials of the part does not exceed the requirements for concentration limits specified by SJ/T11363-2006.
X: indicating that content of the hazardous substance or element in, at least one kind of, homogeneous materials of the part exceeds the requirements for concentration limits specified by SJ/T11363-2006. Producer may further explain the technical excuse to the items marked with “X” perspecific conditions here.

24. Related drawings

24.1. SH2-1/SH2-2, SPU, SAU connection diagram

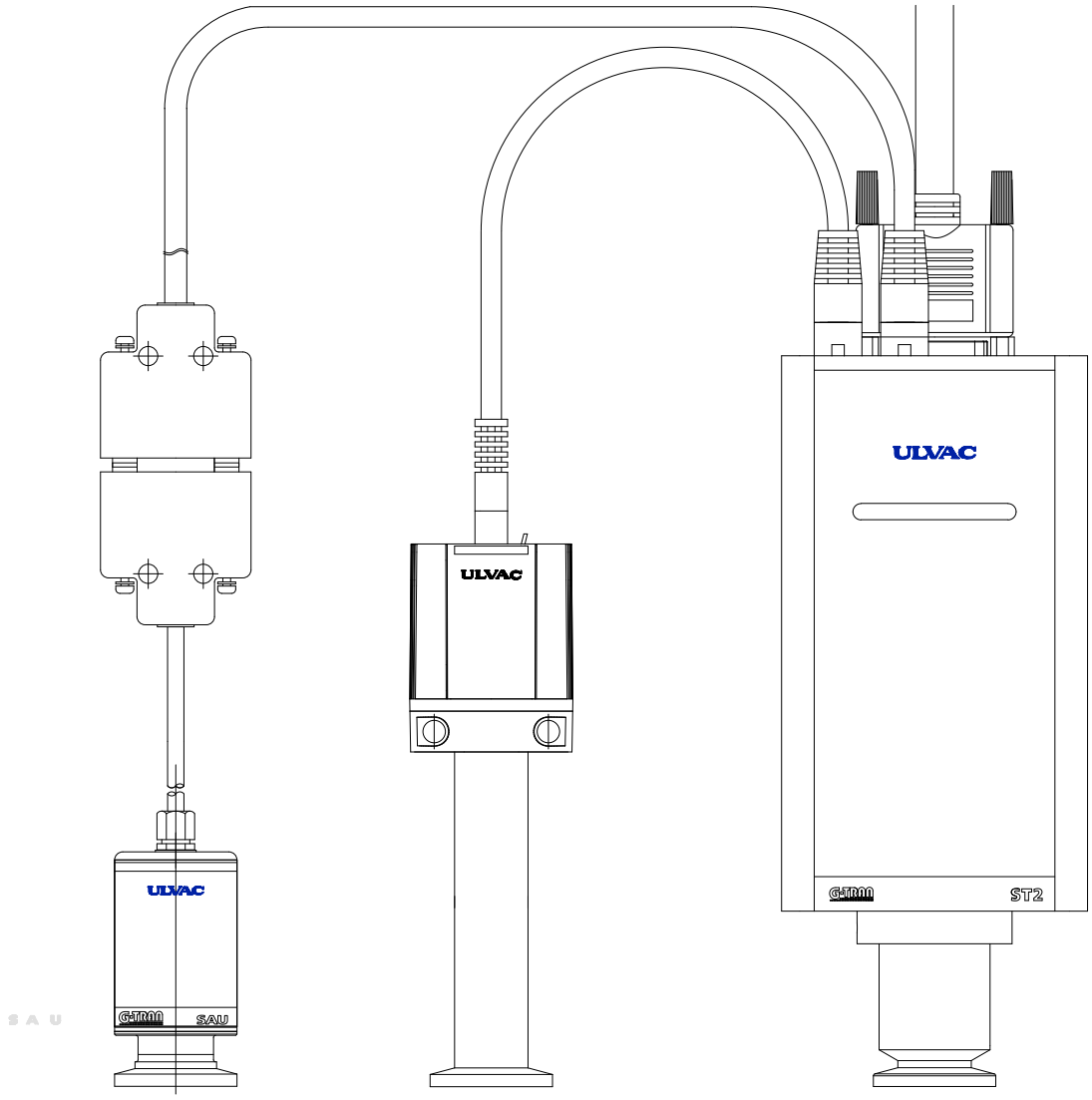

24.2. SH2-1/SH2-2、SWU connection diagram

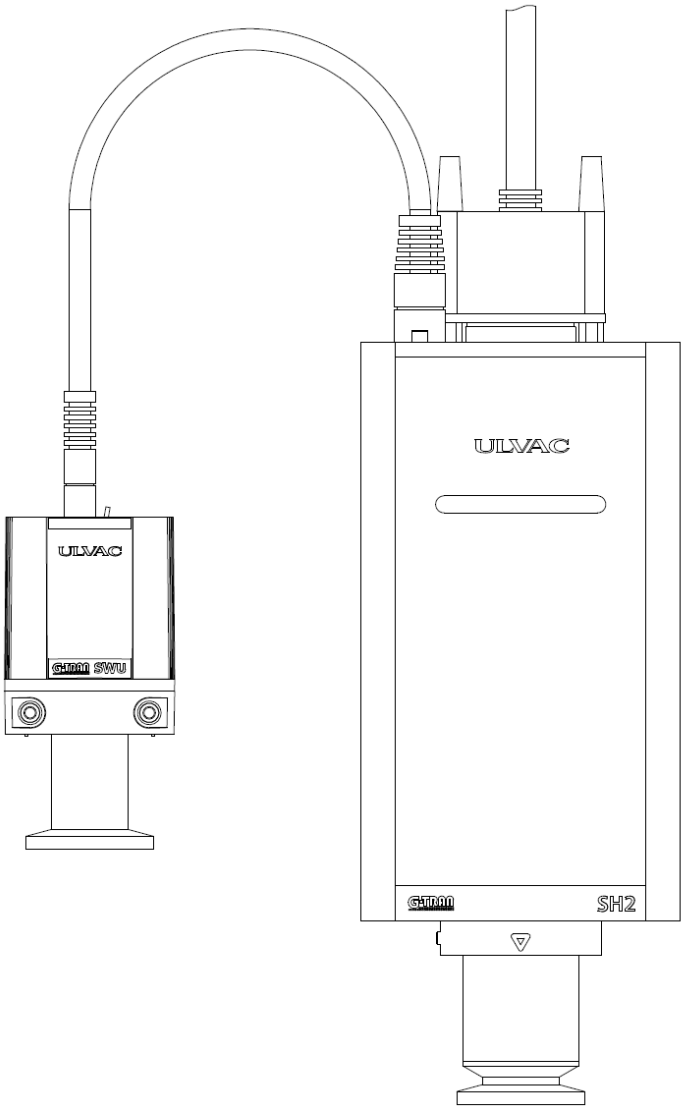

24.3. SH2-1 dimensions

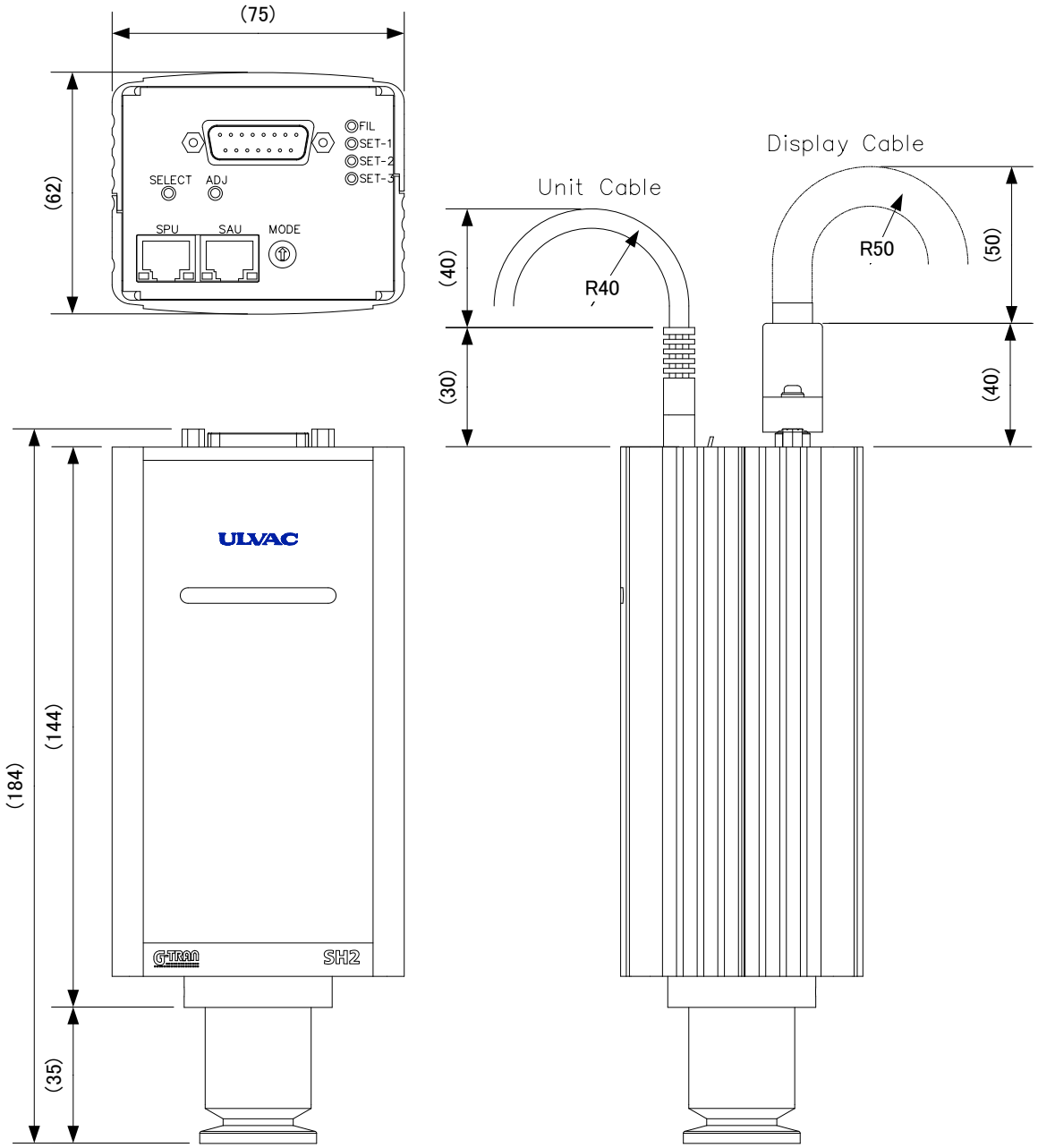

24.4. SH2-2 dimensions

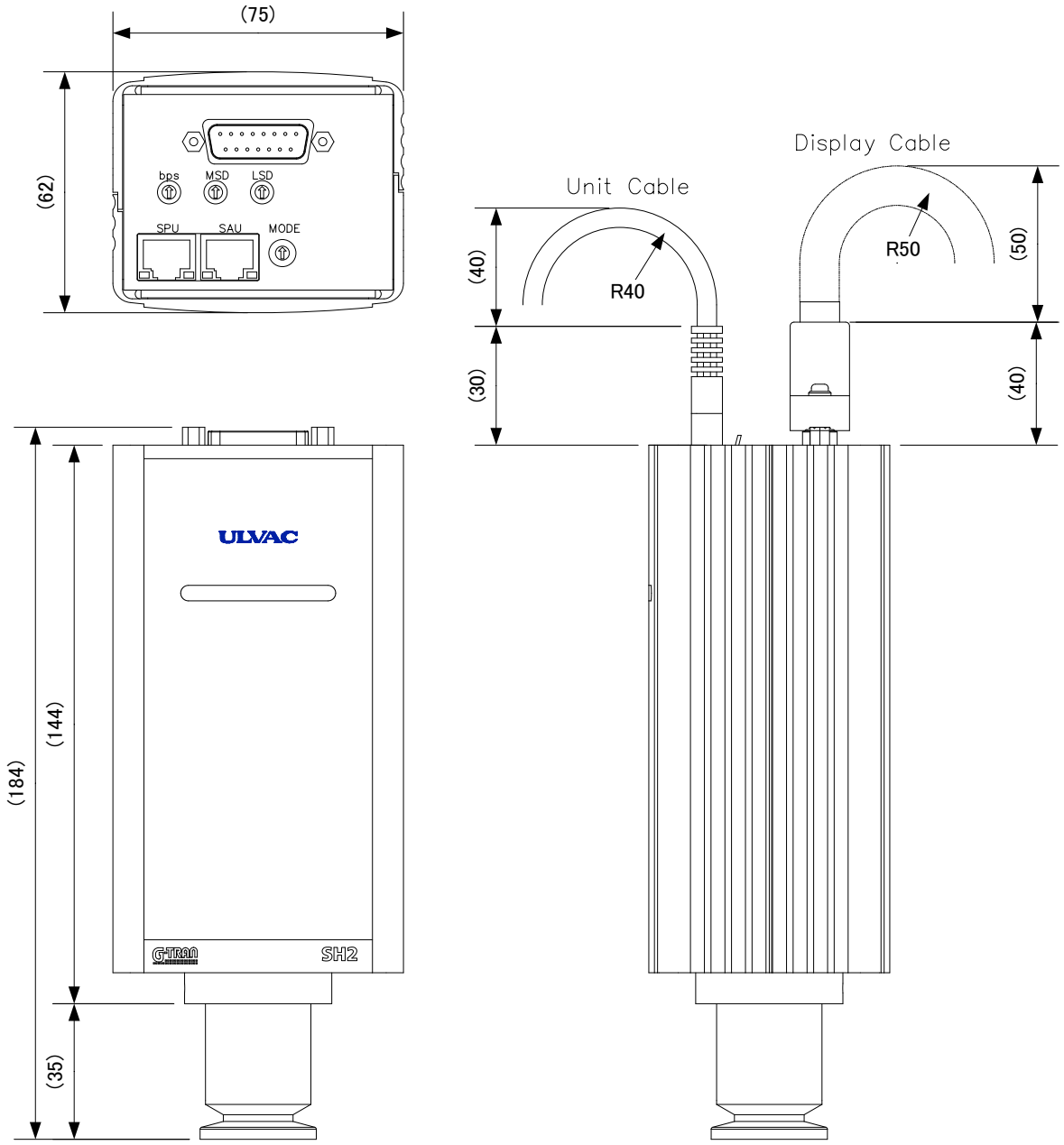

24.5. Gauge head M-44/34, M-45/35, M-46/36 dimensions

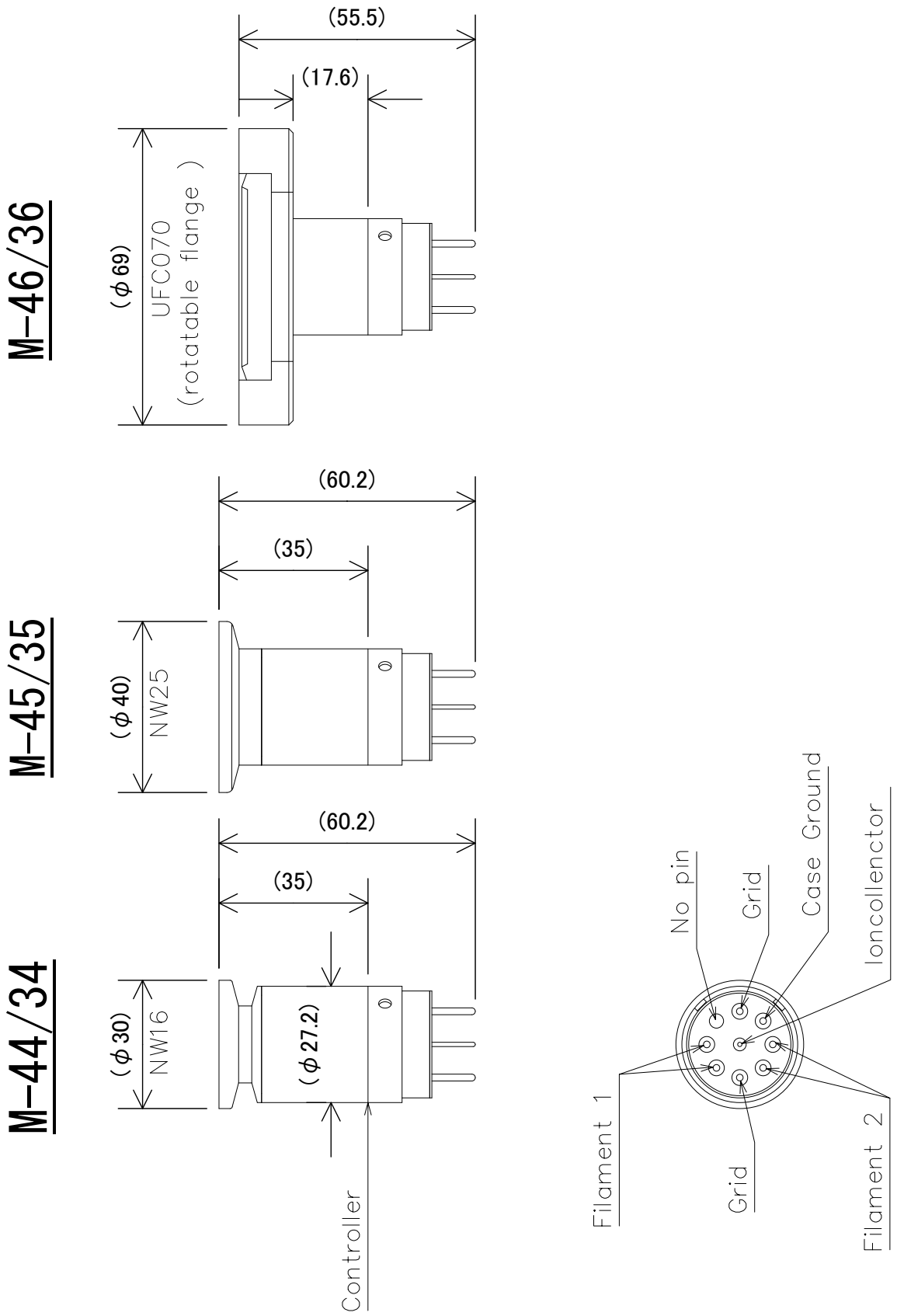

24.6. Display unit cable

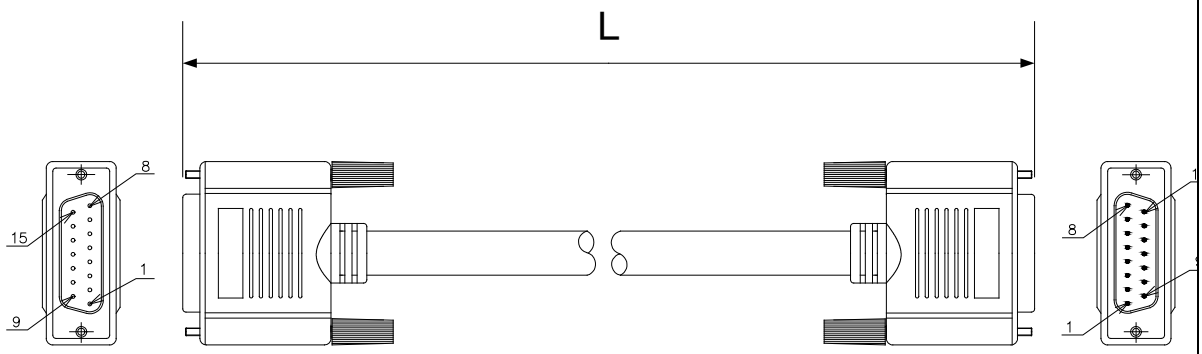

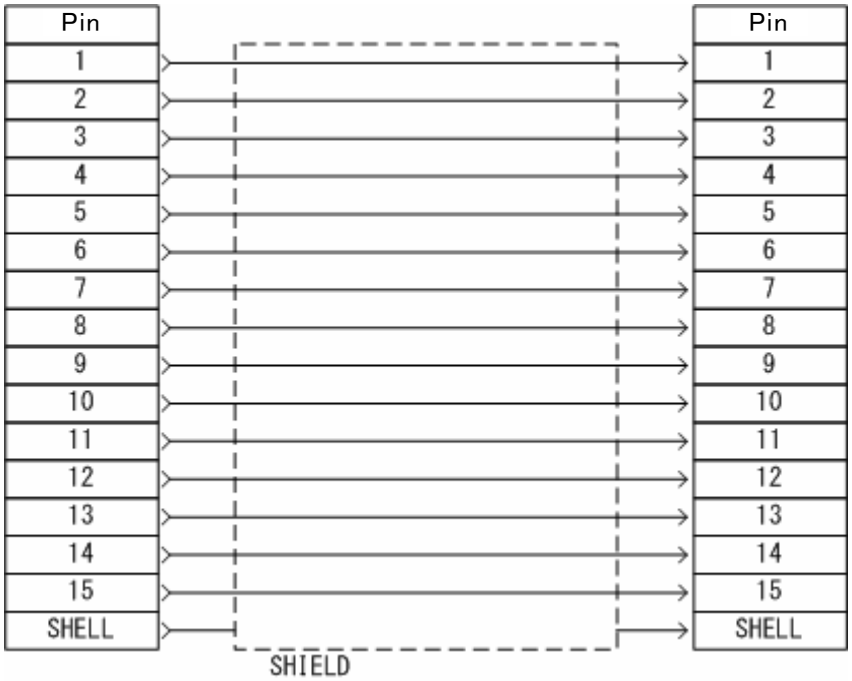

24.7. Unit cable (GUC-P)

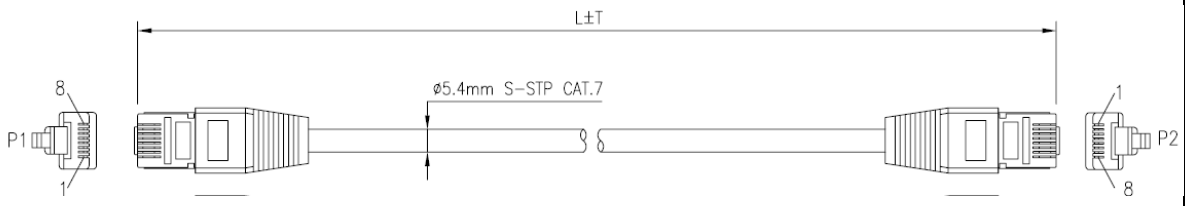

P1 (RJ-45)		P2 (RJ-45)	WIRE COLOR
1	------	1	WHITE/ORANGE
2	------	2	ORANGE
3	------	3	WHITE/GREEN
6	------	6	GREEN
5	------	5	WHITE/BLUE
4	------	4	BLUE
7	------	7	WHITE/BROWN
8	------	8	BROWN
Shell	------	Shell	DRAIN

24.8. Unit cable (GUC-A)

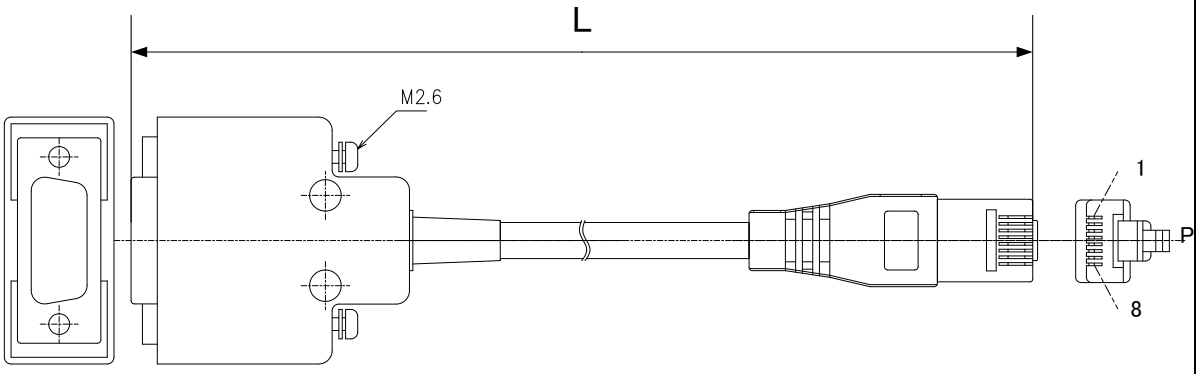

P1(RJ-45)		P2(RJ-45)	WIRE COLOR
1	———	1	WHITE/ORANGE
	———	3	WHITE/GREEN
	———	7	WHITE/BROWN
2			
3			
4			
5	———	4	BLUE
6	———	5	WHITE/BLUE
	———	6	GREEN
7	———	2	ORANGE
	———	8	BROWN
8			
9			
SHELL	———	SHELL	DRAIN