No.SK00-7200-EI-003-08

ULVAC

AxTRAN

MODEL ISX2

EXTREME-HIGH VACUUM GAUGE

INSTRUCTION MANUAL

This manual is for ultra-high vacuum gauges of serial numbers 00100 and higher.

Read this manual carefully before using this gauge and keep it at hand for immediate reference.

When used by Torr, the following conversion equations shall be used.

1[Torr]=1.3332 × 10^2 [Pa]

1[Pa]=7.5006 × 10^{-3}[Torr]

Components Division,

ULVAC, Inc.

2500 Hagisono, Chigasaki City, Kanagawa Prefecture, Japan 253-8543

http://www.ulvac.co.jp/

Before Use of This Gauge

Thank you for purchasing this ULVAC product.

Upon receipt of the product, verify that is the correct model ordered and that it has not been damaged during transport.

⚠WARNING	Read this instruction manual before installing, operating, inspecting, or maintaining the product and fully understand the safety precautions, specifications and operating procedures regarding the product.
⚠WARNING	The copyright of this instruction manual is held by ULVAC, Inc. You are prohibited from copying any portion of this instruction manual without the consent of ULVAC Inc. You are also prohibited from disclosing or transferring this instruction manual to third parties without the express written consent of ULVAC Inc.
⚠CAUTION	The contents described in this instruction manual are subject to change without prior notice because of changes in specifications or because of product improvements.

Safety Denotations

⚠WARNING	Safety symbols are used throughout this instruction manual to call the operator's attention to safety. The terminology used in safety symbols is classified below.

⚠DANGER	Indicate status of urgency of danger when failure to comply with DANGER results in serious personal injury or death The work ignoring this warning will lead to serious damage to human life or factory facility (including this equipment) at a high probability.
⚠WARNING	Indicate status of danger when failure to comply with WARNING results in serious worker’s injury or death. The work ignoring this warning will cause possibility leading to serious damage to human life or factory facility (including this equipment)
⚠CAUTION	Indicate status of danger when failure to comply with WARNING results in minor injury or moderate damage. The work ignoring this warning will cause possibility leading to minor damage to worker or breakage to equipment or necessary to adjust.
✔ Note	Direct hazard is not existed, describe the necessity to know from the viewpoint of worker’s safety or correct and safe operation of equipment

Safety Precautions

For safe use of this gauge, be sure to read this manual and the following safety precautions.

WARNING	Turn off power. If the gauge is damaged, immediately turn off the power. Otherwise, fire or electric shock can result. For safety reasons, contact your local ULVAC representative or ULVAC, Inc.
WARNING	Turn off power. If the gauge gets unusually hot or gives off smoke or unusual smell, immediately turn off the power. Otherwise, fire can result. For safety reasons, contact your local ULVAC representative or ULVAC, Inc.
WARNING	Turn off power. Whenever you touch or may touch the sensor connector on the front panel, turn off the power to the gauge. A grid voltage of 100 VDC is applied to the sensor connector. If you touch it when the filament is turned on, you will get electric shock.
CAUTION	Beware of high temperature. Do not touch the sensor head surface, which is very hot during and immediately after operation. If you touch it, you may get burned.
CAUTION	Don′t disassemble. Do not disassemble the vacuum gauge.
CAUTION	Don′t modify. Do not modify the vacuum gauge. If it is modified, its action is not warranted. Also fire or electric shock can result.
CAUTION	Be cautious with operating environment. Do not connect the sensor head to an environment where pressure exceeds atmospheric pressure. If the pressure in the sensor head exceeds atmospheric pressure, the sensor head will be damaged and the sensor head will pop out from the connection, causing damage/injury to human body and others. In that event, provide an isolation valve or other so that the pressure in the sensor head does not exceed atmospheric pressure.
CAUTION	Check line voltage Before turning on the power, make sure the operating voltage and supply voltage polarities are in agreement. If the gauge is connected to an incorrect power source, this gauge and equipment connected to it may be damaged or fire can result.
CAUTION	Ensure ventilation. Do not plug the port for the fan and air vents. If it is plugged, heat will be contained inside, resulting in damage. The vacuum gauge will not indicate a normal value either.
CAUTION	Be cautious with operating environment. Do not use the gauge where it may splashed with water. If it is wetted, trouble, earth leakage or fire can result.
CAUTION	Keep out foreign matter. If metal fragments or combustible material are admitted into the gauge through an opening in the gauge, remove them. Also keep clear the connection terminals on the front and top of the gauge. Otherwise, the vacuum gauge may be damaged.
CAUTION	Beware of impact. Do give an impact to the sensor head.

⚠CAUTION	Check connection See to it that the cable does not come into contact with other conductive part.
⚠CAUTION	Disposal When discarding the vacuum gauge, comply with your local regulations. Customer shall be responsible for the cost relating to disinstallation.
⚠CAUTION	Be cautious with operating conditions Use this gauge within the specified environment range.
⚠CAUTION	Caution in repacking When shipping the gauge, repack it in the same way as on delivery. It is shipped bare, it may be damaged.
⚠CAUTION	**Maintenance** Aluminum electrolytic capacitor and cooling fan are used for the electric circuit in the sensor unit. Generally, the life expectancy of the aluminum electrolytic capacity is limited and the higher the surrounding temperature, the shorter the life. It is recommended to replace the aluminum electrolytic capacitor , cooling fan once every three years or at the time or repair or overhaul to prevent components from being damaged.

Revision History

Date	No.	Reason
Jun.6,2007	01	Correction of errors
Jan.20,2008	02	Optional board details added
Nov.16,2009	03	Pressure unit conversion appendix Pressure expression appendix Supplementary explanation of current unit delete
Nov.13,2013	04	・Sensor material ・Standard Accessories ・WARRANTY ・EC DECLARATION OF CONFORTMITY ・CERTIFICATE OF DECONTAMINATION added
Oct.28,2016	05	Baking temperature added Initial setting、Degassing Time、 Recorder Selection、Offset Adjustment、Interval Setting is change Communication system Correction of errors Communication cable PIN No Correction of errors Reads action status’RS’added
Dec.2,2019	06	Grid voltage Correction of errors

Contents

Page

Attached Illustrations

1. FEATURES OF ISX2

- This gauge is a hot cathode type ionization vacuum gauge with a Bessel box type energy filter arranged between the ion source and the ion collector. It provides a measurement resolution of 0.5×10^{-10} Pa by reducing the residual current due to soft X-rays and electron stimulated desorption (ESD) ions.
- The unit consists of a sensor head, cable and measuring unit.
- The sensor head can be used effectively in baking.
- The measurable pressure range is 9.99×10^{-3} to 0.5×10^{-10} Pa.
- The communication function is optional.
- The gauge has two independent pressure contacts.

2. SPECIFICATIONS AND COMPONENTS

2.1. Standard Specifications

Name	Model ISX2 extreme-high vacuum gauge
Compatible sensor head	1 pc.
Pressure display	Mantissa part 3 digits, exponent part 2 digits display □.□□ × 10□□
Pressure protecting function	Filament is automatically turned off at 9.99×10^{-3} Pa or more.
Electron current value	1.0 mA
Degassing function	Electron bombardment system 300 V 5 mA
	Degassing time: can be set from 0.0 to 100 hours Automatically returns to measurement mode with elapse of degassing time
Sampling time	Display output 10^{-8} Pa or more : 0.1 sec interval 10^{-9} Pa or less : One of 0.1, 1, 5 and 10 sec intervals selected
	Recorder output [LIN] 10^{-8} Pa or more : 0.1 sec interval 10^{-9} Pa or less : One of 0.1, 1, 5 and 10 sec intervals selected
	Recorder output [LOG] 10^{-8} Pa or more : 0.1 sec interval 10^{-9} Pa or less : One of 0.1, 1, 5 and 10 sec intervals selected
Set point	Independent 2 points can be set at set value □.□□ × 10□□
	Relay contact output (a contact)
	Contact capacity AC: 125V max., 0.5 A max. Contact capacity DC: 24 V max, 1.0 A max.
Sensitivity factor setting function	Sensitivity factor for nitrogen can be set.
Specific sensitivity factor setting function	Specific sensitivity factors for various types of gas can be set.
Filament 1/2	Can be changed by the program mode on front panel/external I/O and RS-232C (external I/O, communication function are optional)
Recorder output	Each digit mantissa part linear output [LIN] 0 to 10 V
	All measurement ranges pseudo-log. output [LOG] 0 to 10 V
Output impedance	Approx. 100Ω
Resolution	LIN: 10 mV, LOG: 1 mV
External control input signal (option)	Actuated by relay contact input and open collector input, negative logic
	Control switching : [REMOTE / LOCAL]
	Filament : [ON / OFF]
	Filament : [2 / 1]
	DEGAS : [ON / OFF]
	OFFSET : [ON / OFF]
	PROTECT : [ON / OFF]
Control output signal (optional)	Open collector output, negative logic [Rating: $24VDC_{MAX}$, $50\ mA_{MAX}$,Saturation voltageis 1V] (Can be isolated by option board jumper and external connection)
	Pressure Mantissa part 2 digits, exponent part 2 digits □.□ × 10□□ in BCD code
	Power : [ON / OFF]
	Filament : [ON / OFF]
	Electron current : [1mA]
	Degas : [ON / OFF]

		Emission valid : [OK / NG]
Communication (optional)		
	Format	RS-232C
	Baud rate	9600/19200/38400 bps
Material of sensor head		Filament：Ir/Y_2O_3 coat Others：Cu、Ag、SUS304、FeNiCo、Ta、Mo、Pt、Ceramic
CE		EN61326:1997+A1:1998+A2:2001,Class A EN61000-3-2:2000 EN61000-3-3:1995 EN61010-1:2001

2.2. Performance

Compatible sensor head (See page 71 for details.)	X-11	
Measurable pressure range	9.99×10^{-3} to 0.5×10^{-10} Pa	
Measurement accuracy	Within ± 15% (before shipment)	
Measurement conditions	Grid potential	: 100 V
	Filament potential	: 10 V
	Collector potential	: 0 V
	Electron current	: 1.0 mA
	Sensor head sensitivity	: 0.023 Pa^{-1} (average value)
Baking temperature	Sensor head:300℃ Ion collector cable：80℃、Sensor cable：150℃	

2.3. Utilities

Operating temperature range	10 to 40°C
Power requirements	100 to 240 VAC, 50/60 Hz
Power consumption	Maximum 30 W
Fuse	250 V, 2 A
Outside dimensions	240W × 380D × 99H (mm)
Weight	5.3 kg

2.4. Standard Accessories

External input/output connector	D-Sub 9-pin	1 pc.
Power cable	125 V, 10 A, 3-wire cable, 3 m long	1 pc.
Quick manual	Ordinary paper	1 copy

2.5. Options

Sensor head	Refer to 2.2 Performance [Compatible sensor head].
Sensor head cable	* Junction box and intermediate cable are required to use a cable 20 m or longer.
Standard	5, 10, 20 m
JCSS calibration certificate	
Inspection record	
Calibration certificate	
Option board	

3. NOMENCLATURE AND FUNCTIONS OF COMPONENTS

3.1. Operation Switch

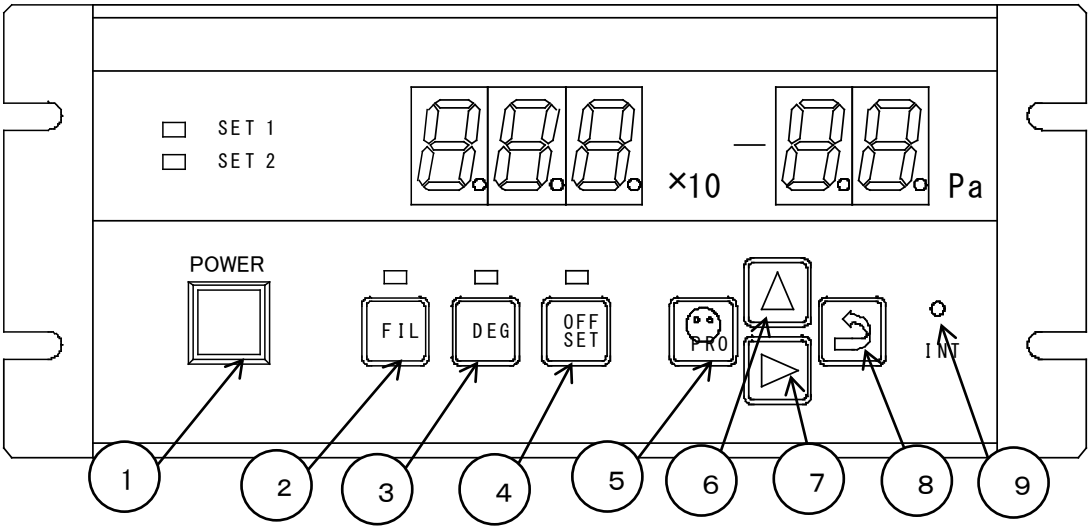

Fig. 3-1 Operation switch panel

Name (Inscription)		Function
①	Power switch (POWER)	Pressing this push-button switch turns on power and a second press on it turns it off. When the power is on, the LED in the switch lights.
②	Filament key (FIL)	Used to turn on/off the filament. The first press on the key turns on the filament and a second press turns it off.
③	Degas key (DEG)	Used to turn on/off degassing. The first press on the key turns on degassing and a second press turns it off. Degassing is automatically turned off after a preset time.
④	Offset key (F1)	Adjusts the offset of the measuring system. Pressing the key selects the offset mode and returns to the normal measurement in about 3 minutes.
⑤	Program key (○ PRG)	Switch to change over to the setting mode. Each press on the switch changes over the set mode. Holding down the key for 2 seconds or more reverts to the measurement mode.
⑥	UP switch (△)	Each press on the switch increments a set value by one.
⑦	SHIFT switch (▷)	Shifts a digit to the right.
⑧	ENTER switch (⏎)	Used to store a set value in memory. A set value cannot be changed unless this switch is pressed because it is not stored in EEPROM.
⑨	INT switch	Used when AxTRAN is operated for the first time or when the sensor head is replaced. Detects the maximum value of the gas ion peak intensity.

3.2. Front Panel Lamps

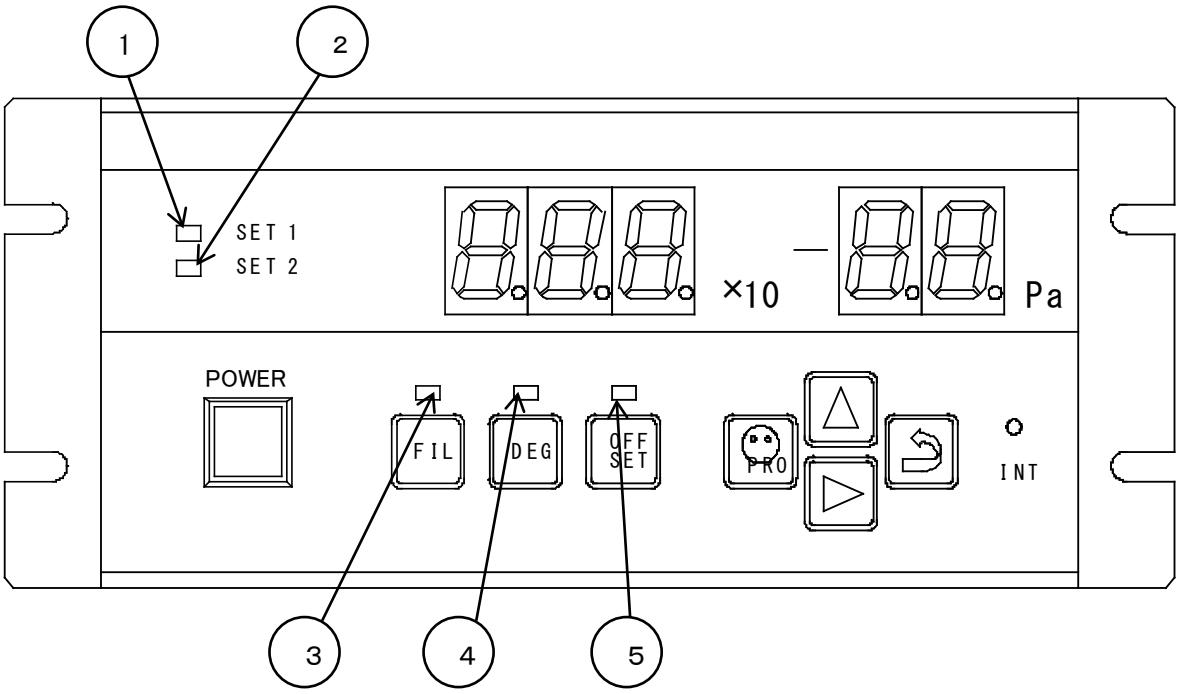

Fig. 3-2 Front panel lamps

Name (Inscription)			Function
①	SET-1 lamp	(SET1)	Lit when set point 1 is activated.
②	SET-2 lamp	(SET2)	Lit when set point 2 is activated.
③	Filament lamp		Lit: When the filament is ON and the emission current is normal. Blink: When the filament is ON and the emission current is abnormal.
④	DEGAS lamp		Lit when degassing is ON.
⑤	Offset lamp		Lit when offset adjustment is being made.

3.3. Front Panel Measurement Value Display/Set Value Indicator

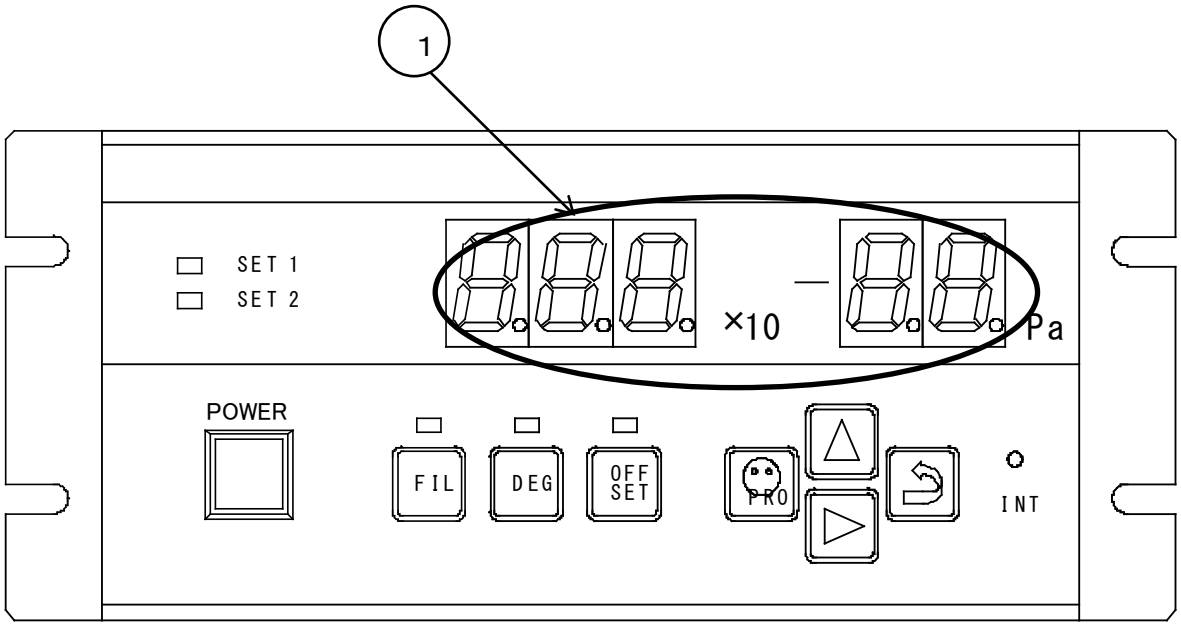

Fig. 3-3 Front panel measurement value display/set value indicator

Status		Function
①	When in the measurement mode	Displays the pressure measurement value.
	When in the program set mode	Displays the set value of each program.

3.4. Rear Panel

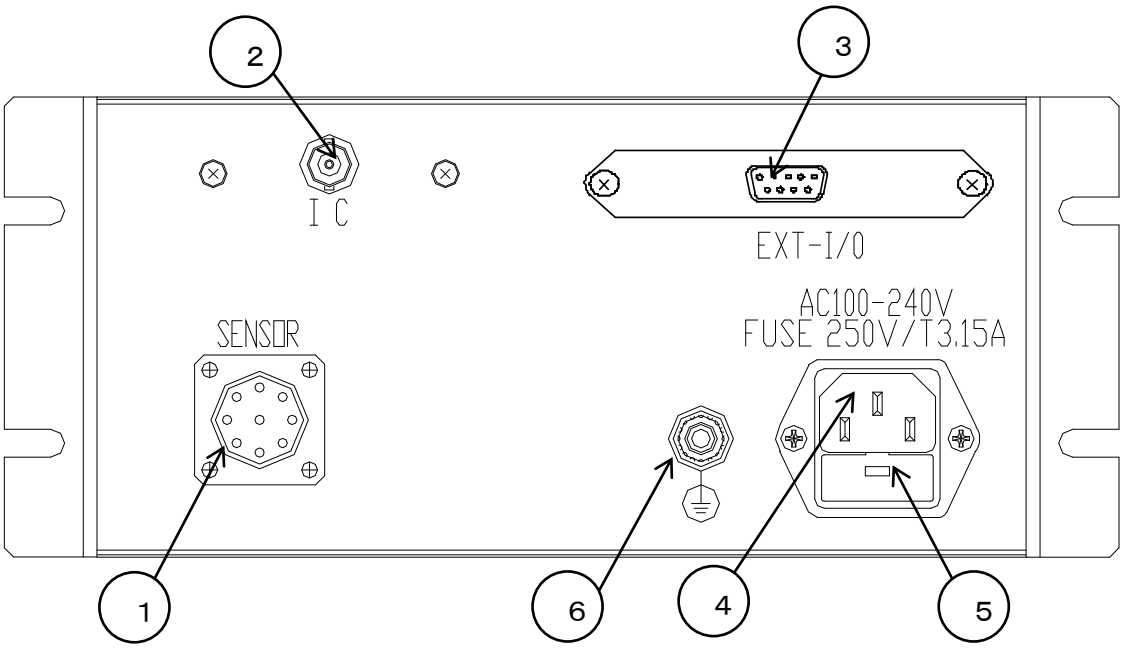

Note: This figure shows the standard panel. If the option board is installed, refer to the manual for the option board.

Fig. 3-4 Rear panel

Name (Inscription)		Function
①	Sensor connector (SENSOR)	Connector for connecting the cable for applying power to the sensor head.
②	Input connector (IC)	Coaxial connector for input of ion current.
③	Connector for output of set point and recorder output （EXT-I/O）	D-sub 9-pin socket connector for recorder output and set point output. Digital I/O and serial communication port by changing it with the optional board.
④	Power inlet connector (AC100-240V)	Connector for connecting the 3-core power cord with grounding terminal.
⑤	Power fuse holder (FUSE)	Rapid action 2A fuse for protecting the instrument from overcurrent.
⑥	Grounding terminal	Grounding terminal for this instrument. Analog ground, digital ground and frame ground are common in this instrument.

3.5. Accessory Connector

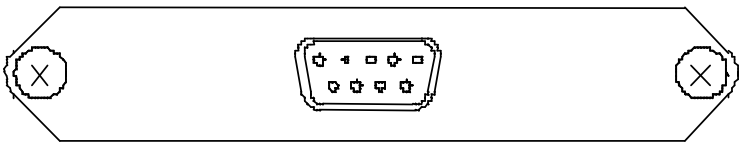

Fig. 3-5 Set point, recorder output connector pin assignment

Terminal No.	Signal identification		Terminal No.	Signal identification	
1	REC-OUT (+)	(OUT-PUT)	6	REC-OUT (–)	(OUT-PUT)
2	SET1	(OUT-PUT)	7	SET–COMMON	(OUT-PUT)
3	SET2	(OUT-PUT)	8		
4			9		
5					

3.6. View when the Top Panel in Controller is opened

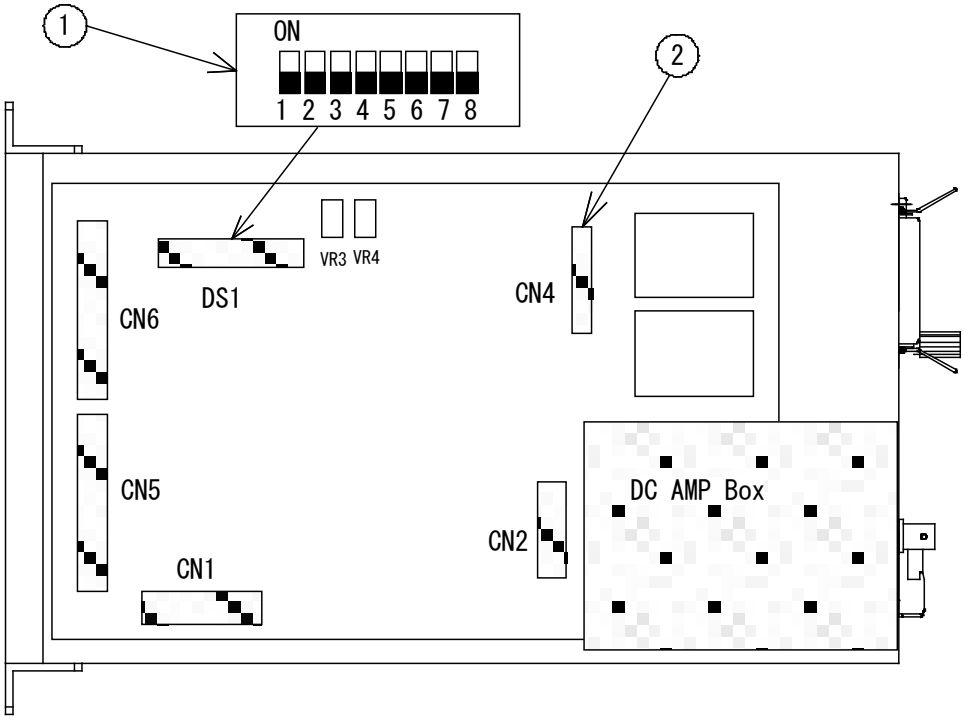

Fig. 3-6 View when top panel in controller is opened

Name (Inscription)		Function		
①	Initial setting internal DIP switch (DS1)	Switch for settings.		
		DIP switch No.	ON	OFF
		1	DC AMP 10^{-13} A	DC AMP 10^{-14} A
		2	Torr	Pa
		3	Not used	Not used
		4	Not used	Not used
		5	Not used	Not used
		6	Not used	Not used
		7	Not used	Not used
		8	Not used	Not used
②	Connector for connecting the option board	Connector for connecting the option I/O and communication boards.		

3.7. View when the Bottom Panel in Controller is opened

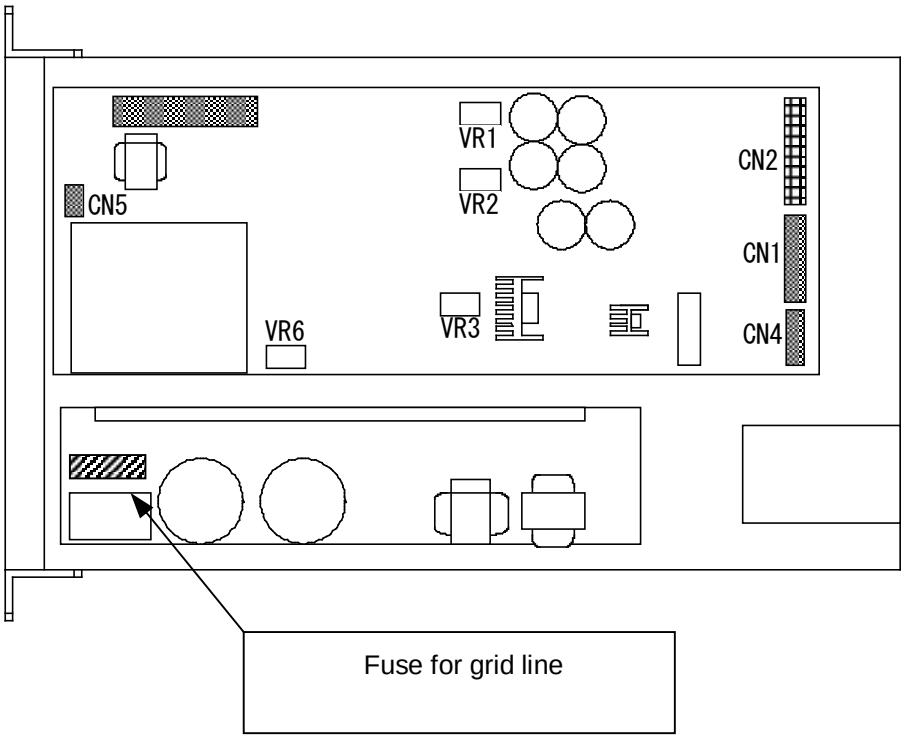

Fig. 3-7 View when the bottom panel in the controller is opened

Name (Inscription)		Function
①	Grid line fuse (F1)	Inserted in the DEGAS line of the grid. Protects the electric circuit in case the grid line is shorted by a load other than the sensor head.

4. INSTALLATION

4.1. Preliminary Operation

WARNING	Turn off power.

① Unpack the gauge and check quantities. (See page 3 for the accessories.)

② Check components to see if they are damaged.

4.2. Installation

4.2.1. Installing the controller

- Install the controller on a panel or other. See page 74 for the mounting hole.

WARNING	Beware of high temperature.
CAUTION	Ensure ventilation.
	Keep out foreign matter.
	Be cautious with operating environment.
	Check connection.

4.2.2. Installing the sensor head

Install the sensor head to the gauge port or flange of a vacuum system.

(1) Measuring position

The gauge measures the static pressure in the position where the sensor head is connected. If there is a flow, source of outgas, or an intense source of electrons or ions in the vacuum system, the measurement value will be affected by them. Select the measuring position carefully and install the gauge in a position where measurement is least affected by them.

Notice that if the sensor head is subjected to vibration, heat radiation, intense electromagnetic field or intense radiation, correct pressure measurement may not be made.

(2) Installing the sensor head

- Install the sensor head in such a way that the sensor head mounting opening is parallel with the flow of gas. See to it that especially gas does not enter the sensor head in the form of beam.
- If the filament is subjected to a strong impact or vibration sideways when it is slackened by heat, it may break or contact with the grid electrode.

4.2.3. Connecting the controller and sensor head

Connect the sensor head, sensor head cable and controller as shown in Fig. 4-1.

- Fix the cable so that no undue force is exerted to the connections between the sensor head and sensor head cable and between the controller and sensor head cable.
- Lay the sensor head cable away from power lines, if possible. Otherwise, noise may appear.
- If the sensor head cable moves, frictional electricity may be generated between the conductor and insulator, which may be a cause of error when the measured pressure is low.
- Avoid installation in a high temperature (above cable specification temperature) or high humidity place.
- Normally, the controller ground and the sensor head ground (outside wall) are connected by means of the sensor head cable. If there is a potential difference between the ground of the controller installation place and that of the sensor head installation place (due to connection of the connector screw and sensor head setscrew), measurement error may arise. In that event, install either of them afloat using an auxiliary wire or decrease the ground resistance.

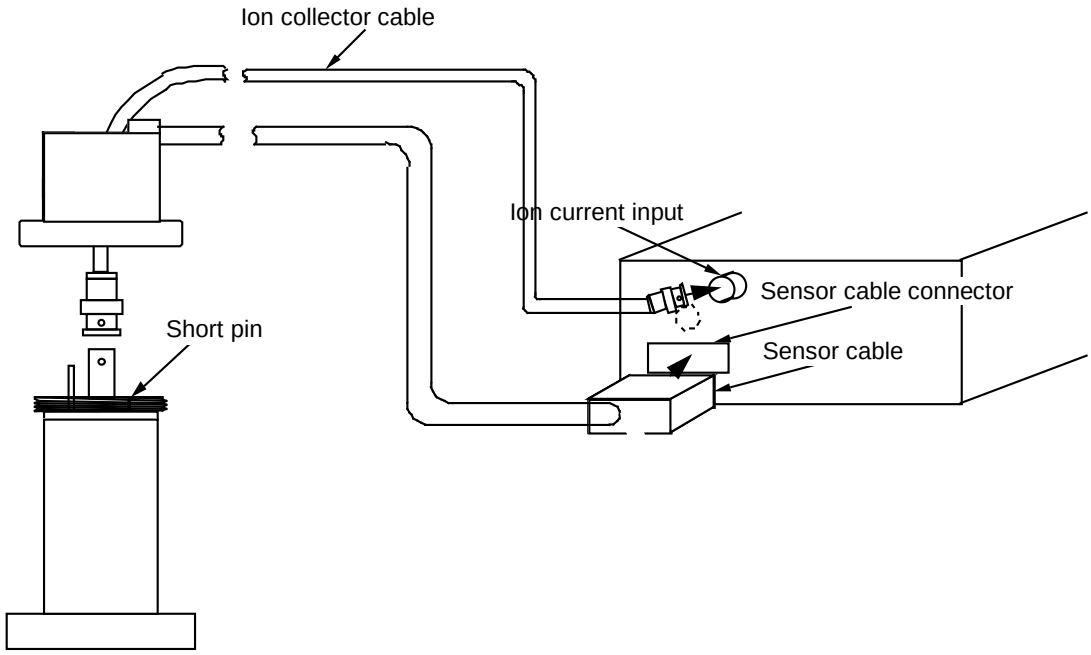

Fig. 4-1 Connection of controller (ISX2) and sensor head (X-11)

CAUTION:
If the potential level differs between the controller ground and sensor head ground (outside wall), normal emission current will not be obtained and normal pressure measurement may not be made.
If the sensor head is connected/disconnected when there is a potential difference, you may get electric shock. (The connectors on both ends of the sensor head cable are at the same potential as their ground.)
Before connecting/removing the cable, turn off the power and make sure there is no potential difference.
Connect/remove the cable by holding the connector body. Connecting/removing the cable by the cable can be a cause of disconnection or poor contact.

5. FLOW OF PROGRAM RUN

To set sensitivity factor, set points 1 and 2, range, degas, filament, recorder and baud rate, follow the instructions in Section 8.

The flow of the display unit operation is as follows.

Refer to the page given at the end of each item for more information.

WARNING	Turn off power.
WARNING	Check line voltage.
CAUTION	Be cautious with operating environment.

Power off state		
↕	Power is applied (page 14)	
Measurement mode (front panel operation)		
FIL ON/OFF	page 15	
INITIALIZE	page 17	
DEGAS ON/OFF	page 18	
OFFSET	page 17	
↕	PROG	2 sec
Set point 1 setting	page 20	
Set point 2 setting	page 21	
Sensitivity factor setting	page 22	
Specific sensitivity factor setting	page 23	
Degassing time setting	page 24	
Filament No. selection	page 25	
Recorder selection	page 25	
Filter selection	page 26	
Offset adjustment interval selection	page 27	
Baud rate setting (option)	page 28 エラー! ブックマークが定義されていません。	
Other state (front panel operation)		
When pressure protection is activated	page 16	

In this manual, procedures are shown with white characters on black background, as shown below.

POW－①

[POW－①] means **POW－①**

So refer to this item.

6. STARTING UP GAUGE (SUPPLY OF POWER)

Turn on the power switch on the front panel of the controller to feed power. POW-① appears and setup is completed.

CAUTION	Check connection.
	Check pressure.

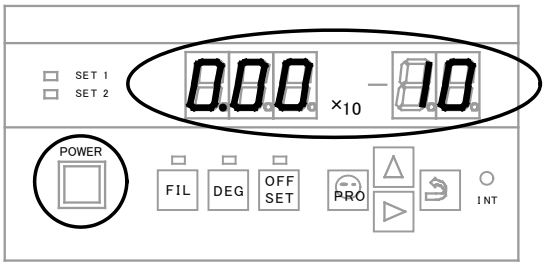

POW－①

The ○ portion in the left figure lights.

([0.00 10] is displayed on the segment indicator.)

7. FRONT PANEL OPERATION

7.1. Filament ON/OFF

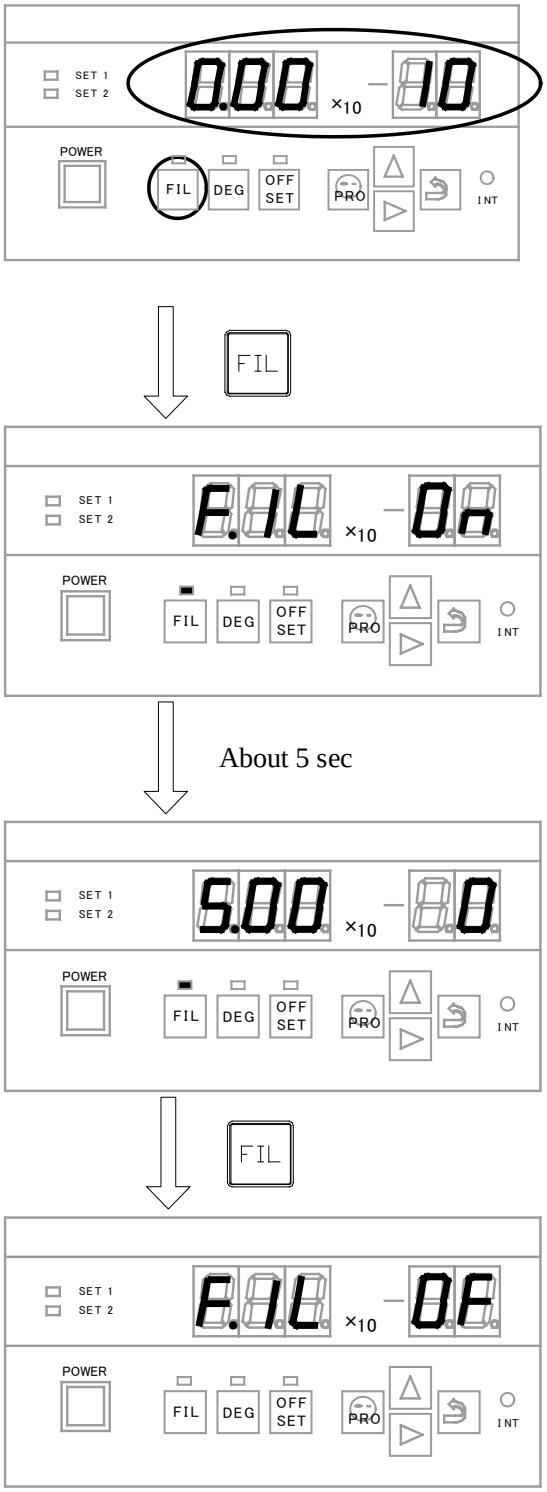

MESU-①

The first press on the FIL key turns on the filament and a second press turns it off.

When the filament is turned on, the segment indicator displays [FIL on] and the (MESU-② status) is set up.

If the filament is on and the emission current is flowing normally, the lamp above the FIL key lights and measurement starts (MESU-② status).

If the filament is on but electron current is not flowing normally, the lamp above the FIL key blinks.

MESU-②

Pressure is displayed on the segment indicator when in the measurement status.

(Example) Display in the left figure →
5.00×10^{-7} [Pa]

MESU-③

Turning off the filament sets up the MESU-① status after displaying [FIL oF].

CAUTION:
If the electron current value is not normal, refer to "Troubleshooting".
Before turning on the filament, make sure the pressure is in the measurable pressure range using another vacuum gauge.
<u>If pressure rises above 9.99×10^{-3} Pa, the filament will automatically be turned off and [F I L A F] will be displayed on the segment indicator, reverting to the MESU-① status. The recorder output will be 10 V.</u>

CAUTION:
If the pressure is below the measurable limit when the filament is on or if the meter offset has deflected to negative, the following display will appear.
The recorder output is zero volt.

- First, adjust offset with the offset key.
- If there is no change, the pressure is below the measurable pressure.

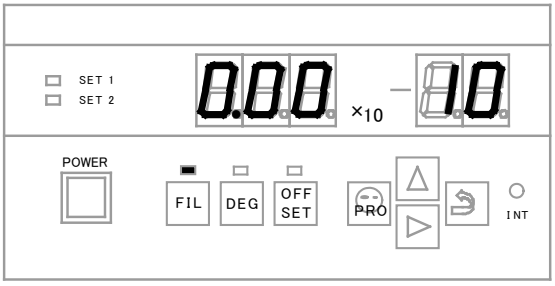

7.1.1. When pressure protection is activated

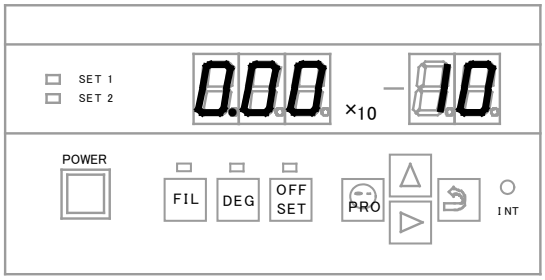

PRT-①

If pressure protection is activated by pressure rise during measurement and the filament is turned off, [FIL aF] will appear on the segment indicator for one second and [0.00 10] will be displayed.
LED on FIL key goes off.
The recorder output is 10 V.
To make measurement again, press the ENT key to set up the (MESU-① status) and check pressure by an ion gauge or other and turn on the filament again.

7.2. Initialization

→ See page 60

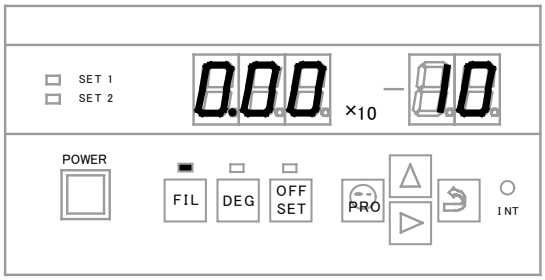

INT-①

Used when the AxTRAN is used for the first time or when the sensor head is changed. Detects the maximum value of the energy spectrum. (Refer to Principles of Operation.) Effective in the MESU-② status. [int] appears during initialization. This action ends in about 10 minutes. Recorder output is 10 V during this action.

CAUTION:
Take this action when the pressure change is small (about ± 5%). The maximum value of peak may not be detected.

CAUTION:
Do not take this action when the controller and sensor head were inspected and calibrated in a pair.

7.3. Offset

→ See page 63

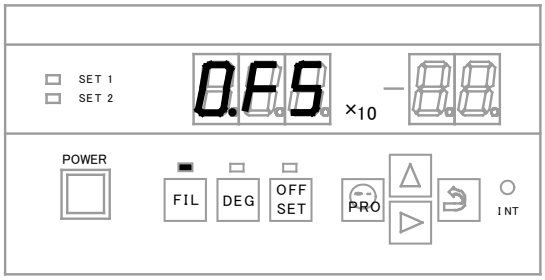

OFS-①

Adjusts the offset of the meter manually. [OFS] is displayed during offset adjustment. This action is effective in MESU-②. Recorder output is 10 V during offset adjustment.

CAUTION:
This action adjusts the offset in the maximum range of the detection system. It can be used effectively especially when measuring a pressure with high accuracy below 10^{-8} Pa. If the pressure is higher than 10^{-8} Pa, it may not function effectively because its offset level is below 1%.

CAUTION:
It is recommended to select the automatic offset function (refer to ″8.9 Offset Interval Setting″) when the ambient temperature changes greatly or when the temperature changes at a certain frequency.

7.4. Degassing ON/OFF

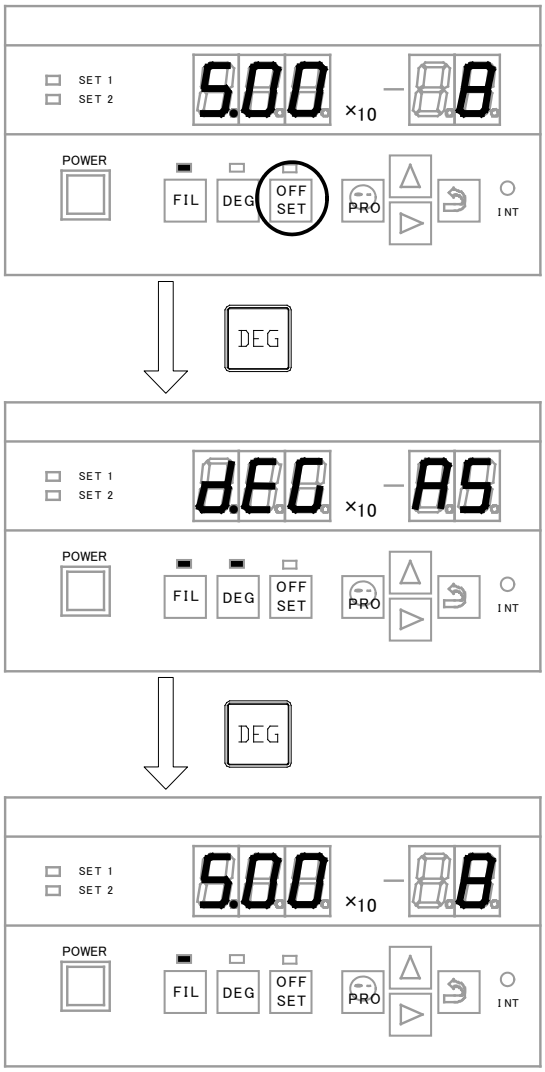

DEG-①

A single press on the DEGAS key when in the MESU-② status (left figure) turns on degassing. A second press on the key turns it off.

When degassing is turned on, the LED marked with ○ in the left figure lights and the DEG-② status is set up after displaying [dEGAS] on the segment indicator.

Degassing is automatically turned off when the time set by the program elapses.

Degassing is feasible even before the set time elapses. The set time count will be reset if degassing is turned off before elapse of the set time.

The recorder output is 10 V during degassing.

DEG-②

Turning of degassing sets up the (MESU-② status) after displaying [dGS oF] on the segment indicator.

CAUTION:
Degassing can be conducted in all measurable pressure ranges. If degassing is performed at a high pressure, however, the sensor head may be contaminated, contrary to your expectation. It is recommended to conduct it at a pressure below 10^{-5} Pa.

8. INITIAL SETTING

To set set points, sensitivity factor, degassing, filament, recorder output, filter and offset interval adjustment, make settings according to the explanations in 8.1 and higher.

These settings can be entered from the front panel or through the communication RS-232C when the option board is set. Here, items to be entered from the front panel are explained.

A set status and set values are retained even after the power is turned off and are effective at the next startup.

* If supply of power is stopped during setting, all the contents being set will not be retained. The set values saved immediately before will be the set values.

CAUTION:
Inputs from the front panel are not feasible when in the [REMOTE] status. Always reset them before input, because the keys on the front panel are locked when in the [REMOTE] status.

Table 8-1 Factory Set Values

Mode		Set value	
SETPOINT-1	SEt-1	Enter	1.00 -3
SETPOINT-2	SEt-2	Enter	1.00 -10
Sensitivity factor set value	SEnS	Enter	2.30 -2 (operating state not selected)
Specific sensitivity factor set value	REL	Enter	1.00
Degassing time set value	dGS	Enter	015.00 (operating status not selected)
Filament	FIL	Select	FIL 1 status
Recorder output	rEC	Select	rEC 2 status
Filter setting	FLt	Select	FLt 01 status
Select auto offset time	OFS	Select	OFS 02 status

8.1. Setting of Set Point 1 → See page 30.

Here, the numeric value of set point 1 is set.

Numeric values that can be set are: 9.99×10^{-3} to 0.00×10^{-10} Pa

* If the setting is not changed, press the [○ PRG] key to transfer control to the SET2-① status.
* To exit the setting mode, hold down the [○ PRG] key for 2 seconds or more and revert to the measurement mode.

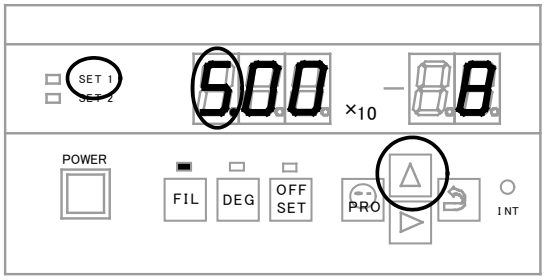

SET1-①

The ○ portion in the left figure blinks after displaying [SEt -1] for about 1 second.
Each time the [△] is pressed, the numeric value of the blinking portion changes. When a desired value is displayed, press the [▷] key to transfer control to the SET1-② status.

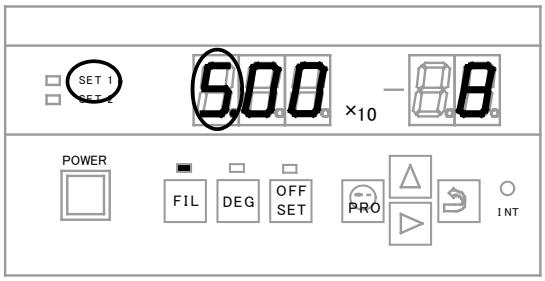

SET1-②

Each time the [▽] key is pressed, the numeric value of the blinking portion changes. Press the [▷] key when a desired value is displayed to transfer control to the SET1-③ status.

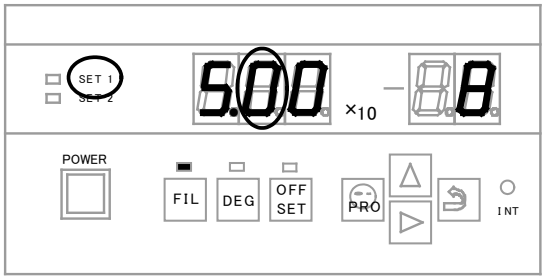

SET1-③

Each time the [△] is pressed, the numeric value of the blinking portion changes. Press the [▷] key when a desired value is displayed to transfer control to the SET1-④ status.

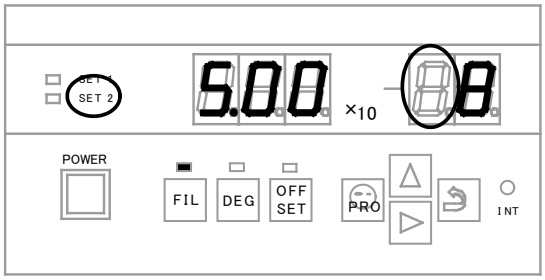

SET1-④

Each time the [△] key is pressed, the numeric value of the blinking portion changes. Press the [] key when a desired value is displayed, to transfer control to the SET2-① status.

* If the [] key is pressed after entering a numeric value out of the settable range, [Err 12] error will be displayed for about 1 second. Then control returns to the SET2-① setting screen and the previously set value will be displayed. Enter a settable value again.

8.2. Setting of Set point 2 → See page 30.

Here, the numeric value of set point 2 is set

Numeric values that can be set are: 9.99×10^{-3} to 0.00×10^{-10} Pa

* If the setting is not changed, press the [○ PRG] key to transfer control to the SET2-① status.
* To exit the setting mode, hold down the [○ PRG] key for 2 seconds or more and revert to the measurement mode.

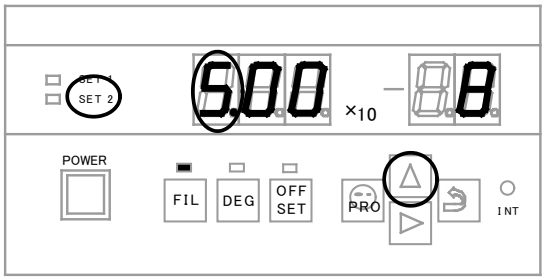

SET2-①

The ○ portion in the left figure blinks after displaying [SEt -1] for about 1 second.
Each time the [△] is pressed, the numeric value of the blinking portion changes. When a desired value is displayed, press the [▷] key to transfer control to the SET1-② status.

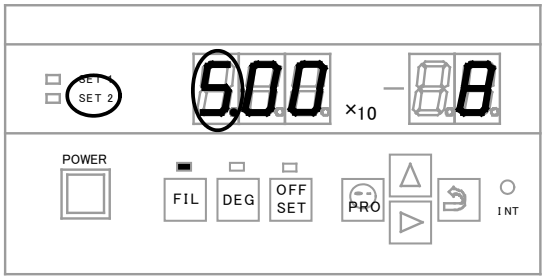

SET2-②

Each time the [△] key is pressed, the numeric value of the blinking portion changes. Press the [▷] key when a desired value is displayed to transfer control to the SET1-③ status.

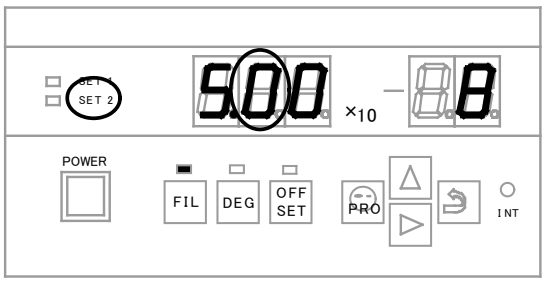

SET2-③

Each time the [△] is pressed, the numeric value of the blinking portion changes. Press the [▷] key when a desired value is displayed to transfer control to the SET1-④ status.

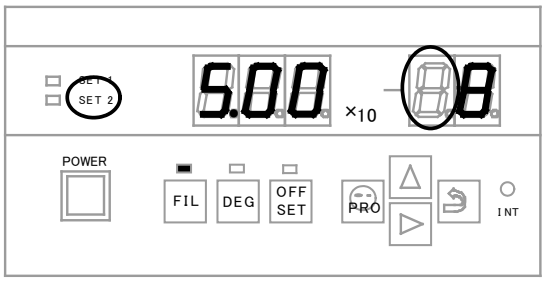

SET2-④

Each time the [△] is pressed, the numeric value of the blinking portion changes. Press the [] key when a desired value is displayed, to transfer control to the SENS-① status.

* If the [] key is pressed after entering a numeric value out the settable range, [Err 12] error will be displayed for about 1 second. Then control returns to the SET2-① setting screen and the previously set value will be displayed. Enter a settable value again.

8.3. Sensitivity Factor Setting

Sets the sensitivity factor peculiar to the sensor head.

→ See page 29.

The sensitivity factor can be set from 9.99×10^{-1} to 0.00×10^{-4} Pa.

* If the setting is not changed, press the [○ PRG] key to transfer control to the REL1-① status.

  To exit the setting mode, hold down the [○ PRG] key for 2 seconds or more to revert to the measurement mode.

* The exponent part is selected from 1, 2, 3 and 4.

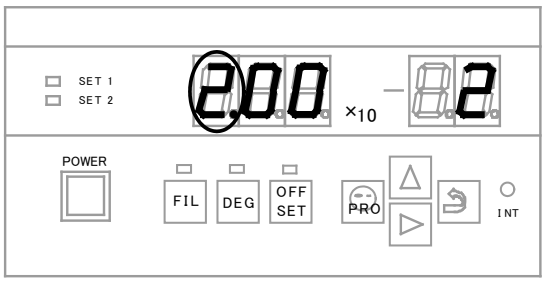

SENS-①

The ○ portion in the left figure blinks after the segment indicator displays [SEn S_] for about 1 second. Each time the [△] key is pressed, the numeric value of the blinking portion changes. Press the [▷] key when a desired value is displayed to transfer control to the SENS-② status.

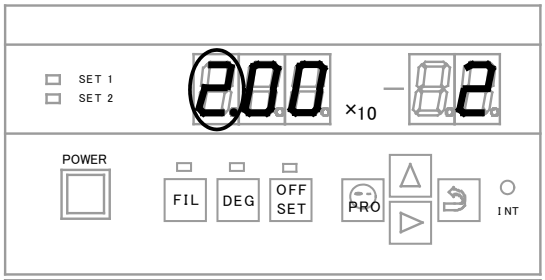

SENS-②

Each time the [△] key is pressed, the numeric value of the blinking portion changes.
Press the [▷] key when a desired value is displayed to transfer control to the SENS-③ status.

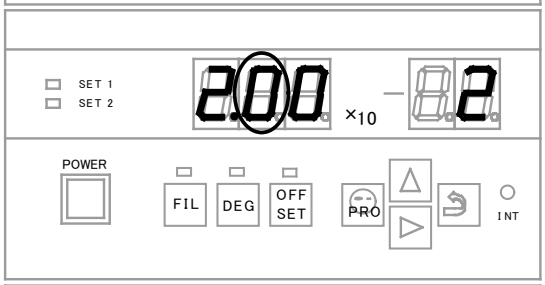

SENS-③

Each time the [△] key is pressed, the numeric value of the blinking portion changes.
Press the [▷] key when a desired value is displayed to transfer control to the SENS-④ status.

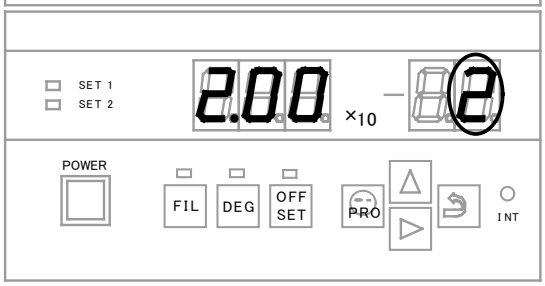

SENS-④

Each time the [△] key is pressed, the numeric value of the blinking portion changes.
Press the [] key when a desired value is displayed to transfer control to the REL-① status.

8.4. Specific Sensitivity Factor Function Setting

→ See page 29.

Here, the numeric value of sensitivity factor is set.

Numeric values that can be set are 9.99×10^{0} to 0.00×10^{-2}.

* If the setting is not changed, press the [○ PRG] key to transfer control to the DEGAS-① status.
* To exit the setting mode and revert to the measurement mode, hold down the [○ PRG] key for 2 seconds or more.

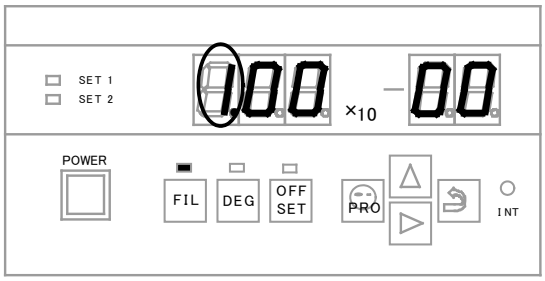

REL-①

The ○ portion in the left figure blinks after displaying [rEL] for about 1 second.
Each time the [△] key is pressed, the numeric value of the blinking portion changes. Press the [▷] key when a desired value is displayed to transfer control to the REL-② status.

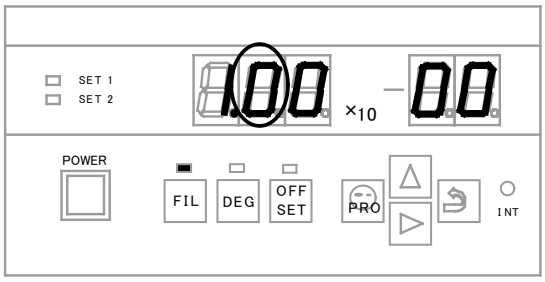

REL-②

Each time the [△] key is pressed, the numeric value of the blinking portion changes. Press the [▷] key when a desired value is displayed to transfer control to the REL-③ status.

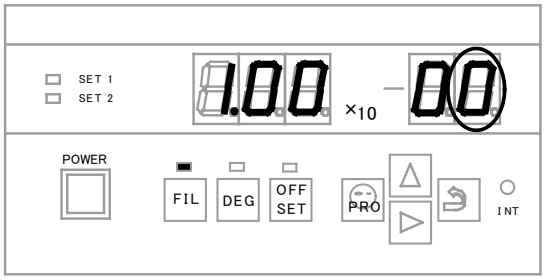

REL-③

Each time the [△] key is pressed, the numeric value of the blinking portion changes. Press the [] key when a desired value is displayed to transfer control to the DEGAS-① status.

* If the [] key is pressed after entering a numeric value out the settable range, [E r r 1 2] error will be displayed for about 1 second. Then control returns to the SET2-① setting screen and the previously set value will be displayed. Enter a settable value again.

8.5. Degassing Time Setting

→ See page 31.

Sets the degassing time 000.0 to 999.9 hours.

* If the setting is not changed, press the [] key to transfer control to the FIL-① status.
* To exit the setting mode, hold down the [○ PRG] key for 2 seconds or more to revert to the measurement mode.

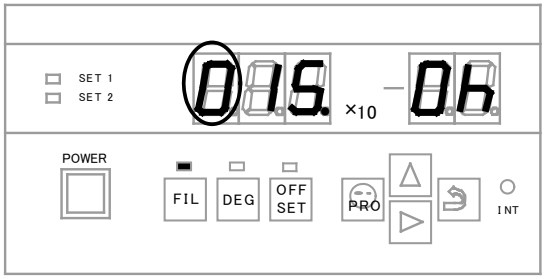

DEGAS-①

The ○ portion in the left figure blinks after the segment indicator displays [dEGaS] for about 1 second. Each time the [△] key is pressed, the numeric value of the blinking portion changes.

Press the [▷] key when a desired value is displayed to transfer control to the DEGAS-② status.

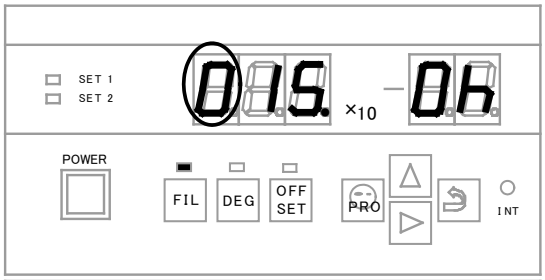

DEGAS-②

Each time the [△] key is pressed, the numeric value of the blinking portion changes.
Press the [▷] key when a desired value is displayed to transfer control to the DEGAS-③ status.

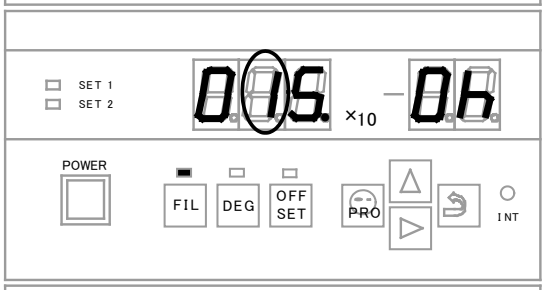

DEGAS-③

Each time the [△] key is pressed, the numeric value of the blinking portion changes.
Press the [▷] key when a desired value is displayed to transfer control to the DEGAS-④ status.

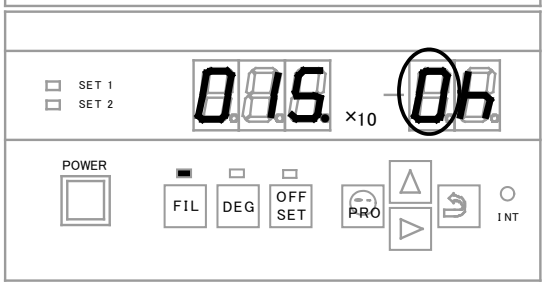

DEGAS-④

Each time the [△] key is pressed, the numeric value of the blinking portion changes.
Press the [] key when a desired value is displayed to transfer control to the FIL-① status.

8.6. Filament No. Selection

→ See page 32.

Here, filament 1 or 2 is selected.

* If the setting is not changed, press the [] key to transfer control to the REC-① status.
* To exit the setting mode, hold down the [○ PRG] key for 2 seconds or more to revert to the measurement mode.
  Before the setting, FIL:1 ⇒ Filament 1
  FIL:2 ⇒ Filament 2.

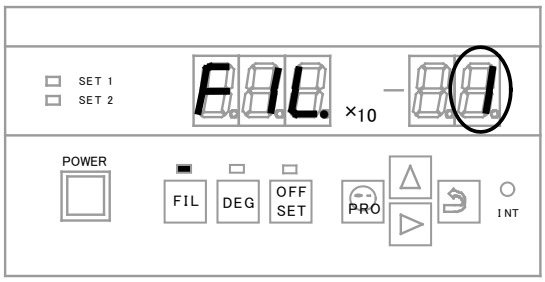

FIL-①

The ○ portion in the left figure blinks after the segment indicator displays [FIL __] for about 1 second. Each time the [△] key is pressed, the ○ portion of the segment indicator in the left figure displays [FIL _1] ⇔ [FIL _2] cyclically.

To use filament 1, press the [] key, with [FIL _1] selected, to transfer control to the REC-① status.

To use filament 2, press the [] key, with [FIL _2] selected, to transfer control to the REC-② status.

8.7. Recorder Selection

→ See page 33.

* If the setting is not changed, press the [] key to transfer control to the SAP-① status.
* To exit the setting mode, hold down the [○ PRG] key for 2 seconds or more to revert to the measurement mode.

Before the setting, rEC : 1 ⇒ LOG mode
rEC : 2 ⇒ LIN mode

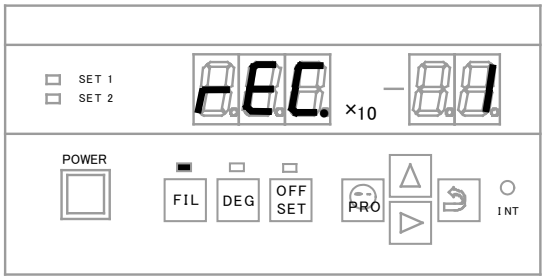

REC-①

The ○ portion in the left figure blinks after the segment indicator displays [rEC __] for about 1 second. Each time the [△] key is pressed, the ○ portion of the segment indicator in the left figure displays [rEC _1]⇒ [rEC _2]⇒ [rEC _1] ・・ cyclically.

To use recorder LOG mode, press the [] key, with [rEC _1] selected, to transfer control to the SAP-① status.

To use recorder LIN mode, press the [] key, with [rEC _2] selected, to transfer control to the SAP-① status.

8.8. Filter Setting

→ See page 60.

Sets the measurement time at a pressure below 10^{-9} Pa.

Select a value from 00, 01, 10, 30, 60 and 90.

* If the setting is not changed, press the [] key to transfer control to the FIL-① status.
* To exit the setting mode, hold down the [○ PRG] key for 2 seconds or more to revert to the measurement mode.

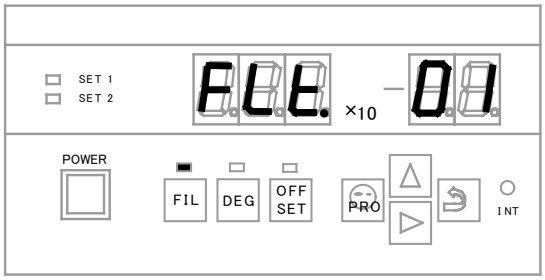

SAP-①

The ○ portion in the left figure blinks after the segment indicator displays [FLt __] for about 1 second. Each time the [△] key is pressed, the numeric value of the blinking portion changes [FLt 00] ⇒[FLt 01] ⇒ [FLt 10] ⇒ [FLt 60] ⇒ [FLt 90]・・・ cyclically.

Press the [] key when a desired value is displayed to transfer control to the OFS-① status.

The numeric values of the filter are as follows.

00: No filter
01: 1 second
10: Moving average 10 times
30: Moving average 30 times
60: Moving average 60 times
90: Moving average 90 times

1 second as default. Select one according to the measurement environment.

8.9. Offset Adjustment Interval Setting

→ See page 60.

Offset Adjustment is movement at a pressure below

10^{-9} Pa.

Sets the time interval for offset adjustment.

Select one from 00, 01, 02, 06, 12, and 24 hours.

* If the setting is not changed, press the [] key to transfer control to the FIL-① status.
* To exit the setting mode, hold down the [○ PRG] key for 2 seconds or more to revert to the measurement mode.

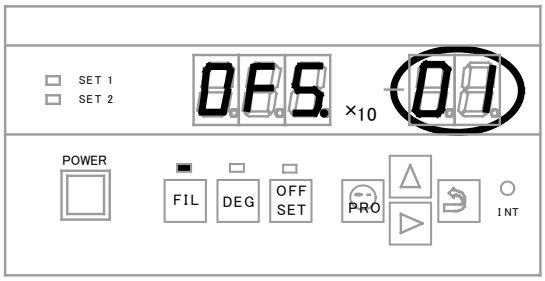

SAP-①

The ○ portion in the left figure blinks after the segment indicator displays [OFS __] for about 1 second. Each time the [△] key is pressed, the numeric value of the blinking portion changes [OFS 00] ⇒ [OFS 01] ⇒ [OFS 02] ⇒ [OFS 06] ⇒ [OFS 12] ⇒ [OFS 24] ⇒ [OFS 00]・・・ cyclically.

Press the [] key when a desired value is displayed to transfer control to the MENU-① status.

The meanings of the numeric values in the offset interval setting are as follows.

00: Automatic offset off, manual offset mode
01: Automatic offset adjustment at every 1 hour
02: Automatic offset adjustment at every 2 hours
06: Automatic offset adjustment at every 6 hours
12: Automatic offset adjustment at every 12 hours
24: Automatic offset adjustment at every 24 hours
00 (automatic offset off) as default.

Select one according to the changes of temperature and measurement environment.

8.10. Setting of Baud Rate

→ See page 46.

Here, the baud rate of RS-232C is selected.

Effective when the option board is mounted.

* If the setting is not changed, press the [] key to transfer control to the SEN-① status.
* To exit the setting mode, hold down the [○ PRG] key for 2 seconds or more to revert to the measurement mode, when the LED in the [○ PRG] key will go off.

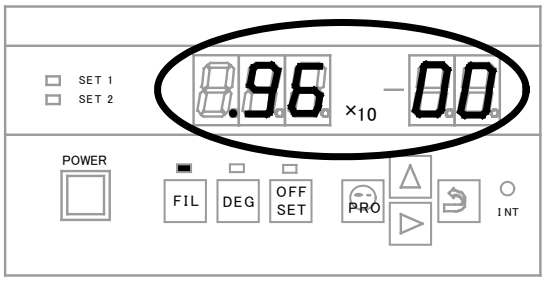

BPS-①

The ○ portion in the left figure blinks after the segment indicator displays [bPS __] for about 1 second. Each time the [△] key is pressed, the numeric value of the blinking portion of the segment indicator in the left figure changes [96 00] ⇒ [192 00] ⇒ [384 00] ⇒ [96 00]・・ cyclically.

To use baud rate 9600, press the [] key, with [96 00] selected, to transfer control to the MESU-① status.

To use baud rate 19200, press the [] key, with [192 00] selected, to transfer control to the MESU-① status.

To use baud rate 38400, press the [] key, with [384 00] selected, to transfer control to the MESU-① status.

9. FUNCTIONS

9.1. Setting of Sensitivity Factor

9.1.1. Sensitivity factor

The ionization gauge measures pressure by detecting the ions produced by accelerating electrons striking against gas molecules as an ion current. The ion current value at this time is expressed by the following equation.

$Ii = k*Ie*P$ ····· Equation 1

Ii : ion current value (A), k : sensitivity factor (Pa^{-1}), Ie: electron current value (A),
P : pressure (Pa)

The sensitivity factor k is the product of the ionization cross sectional area for the gas to be ionized (σ), traveling distance of electrons in the ionization region (L), probability of the produced ions reaching the ion collector (Pi), ion collecting efficiency (Ps), etc. Therefore, L and Pi will differ if the sensor head differs even with the same type of gas molecules, so that the value of sensitivity factor k may differ. To overcome this problem, comparison is made with a pressure standard to determine the sensitivity factor k. Normally, this value is determined for nitrogen. With this AxTRAN vacuum gauge, it is about 2.3×10^{-2} Pa on the average.

9.1.2. Setting of sensitivity factor

The sensitivity setting value is entered in the form of □.□□ × 10-□.
Settable values are:

<u>9.99×10^{-1} to 0.01×10^{-4} [Pa^{-1}]</u>

If the mantissa part is set at 0.00, [Err. 12] will be displayed on the segment indicator and the value before the change of setting will be automatically resumed. Set a value again. (both front panel setting and communication setting)
[Err. 12] is displayed on the segment indicator only in the front panel setting.
Input can be made from the front panel and through communication (RS-232C).
The value set last is saved as the set value.
(Example)

If [5.27×10^{-2}] is set from the front panel and [1.33×10^{-2}] is set through the communication (RS-232C) later, the value set from the front panel will be erased and be rewritten to the value entered through the communication (RS-232C).
Therefore, the set value of sensitivity factor will be the value set through the communication (RS-232C), that is, [1.33×10^{-2}] even if the communication (RS-232C) is reset.

9.1.3. Details of specific sensitivity

Specific sensitivity (Srj) is the ratio between the sensitivity factor (k) for nitrogen of the ULVAC sensor head (X-11) and the sensitivity factor (kx) for other type of gas. The actually measured values of sensitivity factor for nitrogen and argon and the specific sensitivity obtained from them are given below for reference.

N_2 : 2.30×10^{-2} Pa^{-1}
Ar : 3.30×10^{-2} Pa^{-1}
Srj (Ar) : $k(Ar) / k(N_2) = 1.43$

When using the specific sensitivity factor, refer to page 65 for the specific sensitivity of a gas to measure (Srj).
Find specific sensitivity from Table 13-1 "Specific Sensitivity of Ion Gauge for Each Type of Gas with respect to Nitrogen and Relative Ionization Cross-Sectional Area" and enter the value multiplied by the sensitivity constant of the ULVAC sensor head 2.30×10^{-2} . In practice, however, there will be an error of about 10 to several tens of percent, because the values in Table 13.1 were not obtained by using the AxTRAN gauge.

CAUTION:
The specific sensitivity factor has been obtained in 100% atmospheric gas. There will be an error if the partial pressure ratio of the atmospheric gas differs.

9.2. Set Point

9.2.1. What is the set point?

The set point function outputs a signal of whether a pressure being measured has come down below a certain pressure value.

The operating state can be checked by the lighting of the LED on the front panel or in the form of relay contact from the external I/O connector or by reading the status when the communication (RS-232C) is used.

The relay rated load of the external I/O connector is [AC : 125 V_{MAX}, 0.5 A_{MAX}, DC : 24 V_{MAX}, 1 A_{MAX}].

9.2.2. Setting of set point

In the case of 3-digits display, the set point value is entered in the form of □.□□ × 10□□.

The settable values are as follows as with the measurable range.

9.99×10^{-3} to 0.00×10^{-10} [Pa]

If a value lower than 0.01×10^{-10} is set or a value higher than 9.99×10^{-3} is set, the value set previously will be automatically set after displaying [E r r . 1 2] on the segment indicator.

(both front panel setting and communication setting)

[Err. 12] is displayed on the front panel only in the front panel setting.

Set point can be entered from the front panel or through the communication (RS-232C).

The value entered last will be saved.

(Example)

If [5.0×10^{-2}] is set from the front panel and [3.00×10^{-5}] is set later through the communication (RS-232C), the value set from the front panel will be cleared and be rewritten to the value entered through the communication (RS-232C).

Therefore, even if the communication (RS-232C) is reset, the set point set value will the value set through the communication (RS-232C) [3.00×10^{-5}].

9.2.3. Internal processing

In the internal circuit, comparison of set points is performed by decimal point 2 digits (3-digits display) and is processed in the form of [□.□□ × 10□□, □.□ × 10□□].

Displayed value [□.□□ × 10□□] = internal processing value [□.□□ × 10□□]

(Example)

If [5.00×10^{-4}] is set at the set point, the set point will be activated when [$5.00 \times 10^{-4} \geq$ measured pressure value].

What is compared is the measured pressure value on display.

9.2.4. Set point activating conditions

The set point action is activated only when the filament is ON and the emission current is normal. If the emission current is not normal, that is, [Em. Valid NG], the measured pressure will not be correct either. Therefore, the operation of the set point is inhibited for the reason that activating the set point at an incorrect vale is not on the safe side.

9.3. Degassing

9.3.1. What is degassing?

Degassing means the process of driving out and exhausting gases by electron bombardment.

It dissociates gas molecules occluded to the grid of the sensor head or the energy filter by electron bombardment to reduce the rate of gas released from the sensor head. If the molecules occluded to the grid is very active, however, the degassing effect may hardly be obtained. If degassing is conducted in a high pressure region, the sensor head may be contaminated, contrary to your expectation, and the rate of gas release may increase.

Degassing mode

A single press on the DEGAS switch actuates degassing. Degassing will be automatically turned off with elapse of an arbitrarily specified time.

If degassing is turned off before elapse of the specified time, degassing can be turned off by pressing the DEGAS switch.

9.3.2. Setting the degassing time

The degassing time value is entered in the form of □.□□ hrs.

Values that can be set are as follows.

<u>000.0 to 999.0 [hours]</u>

The degassing remaining time can be displayed by pressing the [] key on the front panel during degassing.

The degassing time can be entered either from the front panel or through the communication (RS-232C).

The degassing time set last is saved.

(Example)

If [30] is set from the front panel and [50] is set through the communication later, the value set from the front panel will be erased and be rewritten to the value entered through the communication (RS-232C). Therefore, the value set on the timer will be the value set through the communication [50] even if it is reset.

9.3.3. Degassing operation

(1) Actuating condition

Degassing cannot be actuated unless the filament is ON. Even when the emission current is not normal [Em. Valid NG], degassing can be conducted only if the filament is ON.

(2) Form of operation

Degassing operation can be entered from the front panel or external I/O connector or through the communication (RS-232C) optionally.

However, degassing operation from the external I/O is performed manually.

(3) Caution in operation

Degassing can be conducted within all measurable ranges, but if it is conducted in a high pressure region, the sensor head may be contaminated, contrary to your expectation.

It is recommended to conduct degassing at a pressure below 10^{-6} Pa.

(4) Pressure protecting action

Filament protecting function is not provided against pressure rise during degassing. Monitor the pressure by another ion gauge or other.

(5) Filament burnout

If the filament burns out during degassing, [Err. 14] will be displayed. To reset this error message, press the [] key.

9.4. Filament Change

The sensor head (X-11) has two filaments.

The filament can be changed by input from the front panel, external I/O connector or through the communication (RS-232C) (option).

9.4.1. Cautions in operation

- Filament change and pressure measurement

  When the filament is changed, the gas adsorbed to the filament and its stem will be released for some time after it is activated, causing the pressure to rise temporarily. As a result, the pressure indication will on higher side.

  The sensitivity of the sensor head depends on the distance between the filaments, grid and ion collector electrode. The sensitivity differs slightly between filament 1 and filament 2 because the distance between filaments 1 and 2 and the grid electrode differs. As a result, the measured pressure output value also differs slightly (within measurement accuracy).

  Normally, the sensitivity factor obtained by using filament 1 is attached before shipment.

- Filament change and external output

  If the filament is changed over when it is ON, 0.00×10^{-10} [Pa] will be displayed.

  Also the BCD output will be 0.0×10^{-10} [Pa] and the recorder output will be in the initial state at 0.00 V.

CAUTION: Change over the filament with the filament turned OFF.

9.5. Changing over Recorder Output

The recorder outputs the pressure measurement value by an analog signal.

Two modes are available for the recorder outputs of measured pressure: each digit in linear output mode (1: LIN) and pseudo-logarithmic mode (2: LOG).

9.5.1. Setting of recorder mode

The recorder mode is set in the form of LOG, LIN.

9.5.2. Measurement value output in each status

Table 9.1 gives the measurement value outputs in different statuses that can occur in measurement.

Table 9-1 Measurement Value Output Status

Status	Measurement value output voltage
Filament OFF	0.00 V
Filament ON [Em. Valid OK]	Voltage corresponding to measured pressure
Filament ON [Em. Valid NG]	0.00 V
When pressure protection is activated (Filament is OFF)	10.00V
When measurable lower limit is exceeded	Voltage corresponding to measured pressure (reference value)
When degassing [DEGAS]	10.00 V
When offset [OFS]	10.00 V
When initialized [INT]	10.00 V

9.5.3. LIN output

An analog voltage of 0 to 10 V proportional to the mantissa part is outputted, that is, 0.00 V when the mantissa part □.□□ of the pressure display is 0.00, 1.00 V when it is 1.00, or 9.90 V when it is 9.90.

When pressure is lowering, the range is changed over at a voltage below 0.90 V.

In the linear mode, this cannot be identified if the range differs because the output is proportional only to the mantissa part.

To identify the digit of pressure, use either the recorder output LOG mode or read the analog output of the mantissa part in the linear mode and, at the same time, read the exponent part of the digital output (BCD output).

In this case, however, the value may not be read correctly at the range changeover point because the physical change time differs between the recorder output and digital output (BCD output).

The measured value output voltage is converted to a pressure value as shown below.

P : Pressure value [Pa]
V : Recorder output voltage [V]
S : Measured pressure range

$$P = V \times 10^{-S} \quad [Pa]$$

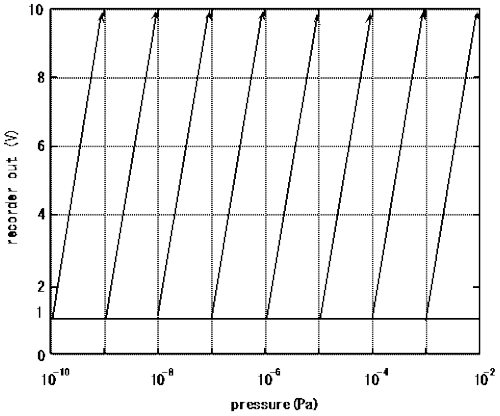

Example of recorder output
when pressure is rising

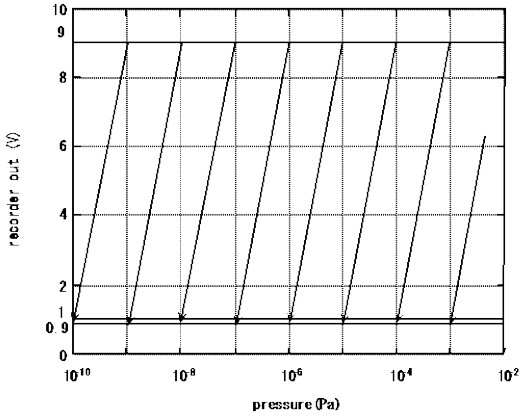

Example of recorder output
when pressure is lowering

Fig. 9-1 Recorder output graph (linear)

9.5.4. LOG output

The entire measurable pressure range is output pseudo-logarithmically by an analog voltage of 0 to 10 volts.

The table below gives the relationship between pressure and output voltage.

Table 9-2 Measured Pressure Value Table

Displayed pressure value [Pa]	Output voltage [V]	Displayed pressure value [Pa]	Output voltage [V]
5.00×10^{-3}	7.500	1.00×10^{-7}	3.100
1.00×10^{-3}	7.100	5.00×10^{-8}	2.500
5.00×10^{-4}	6.500	1.00×10^{-8}	2.100
1.00×10^{-4}	6.100	5.00×10^{-9}	1.500
5.00×10^{-5}	5.500	1.00×10^{-9}	1.100
1.00×10^{-5}	5.100	5.00×10^{-10}	0.500
5.00×10^{-6}	4.500	1.00×10^{-10}	0.100
1.00×10^{-6}	4.100		
5.00×10^{-7}	3.500		

The measurement output voltage can be converted to a pressure value using the following equation.

$$P = 10\,(V-E) \times 10^{-(10-E)}\ [\mathrm{Pa}]$$

where,
- P : Pressure value [Pa]
- V : Measured output voltage [V]
- E : V from which decimal point is rounded down [V]

9.5.5. Resolution and output period

The recorder output is delivered by a 12-bit A/D converter.

The output voltage resolution at this time is as follows.

2.5 mV = 10.23 (VRef) / 4096 (12 bits)

Table 9-3 Measured Value Outputs

	Resolution	Output period
LIN	☆. ★◇o V	0.1 sec interval
LOG	◎. ☆★◇ V	0.1 sec interval
REC-HOLD	☆. ★◇□ V	0.1 sec interval

☆ : Place of 1 of mantissa part
★ : Place of 0.1 of the mantissa part
◇ : Place of 0.01 of the mantissa part
◎ : Place of exponent part
□ : Place of 0.001 of the mantissa part (by software processing)

CAUTION:
The resolution of the recorder output is 10 mV because the measuring circuit can process only down to two places below decimal point.
The accuracy should be considered as ± 10 mV of the output value.

10. EXTERNAL INPUTS/OUTPUTS

10.1. Set Point Output

The internal relay is actuated (reversed) when the set value becomes lower than the set point set value.

The output is a relay contact output and one transfer (COM, a contact, b contact) is output per set point.

The contact capacity is
AC: 125 V_{MAX}, 0.5 A_{MAX}
DC: 24 V_{MAX}, 1.0 A_{MAX}.

However, it is recommended to use it at below 24 VDC so as not to bring the noise source into the AxTRAN gauge (for safety of the connector wiring).

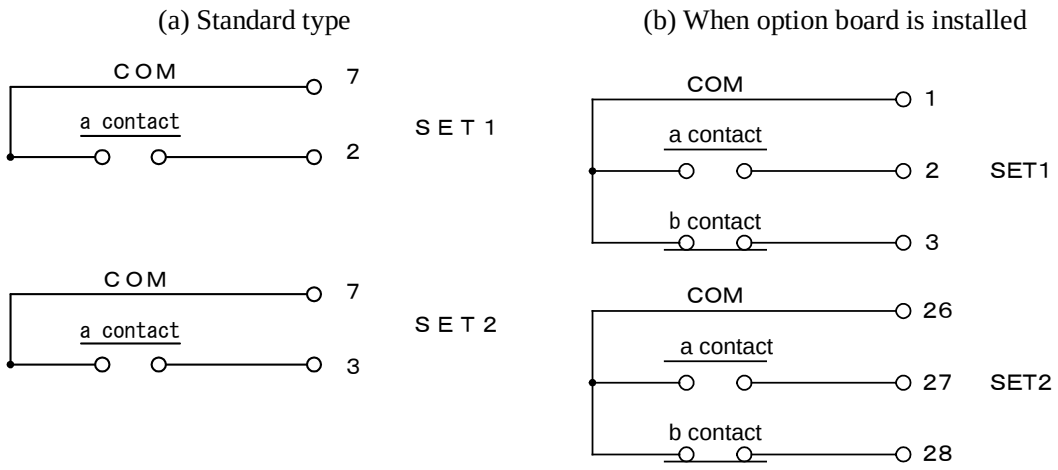

Fig. 10-1 Set point internal circuit

10.2. Option Board

CAUTION	<u>Power supply interception</u> Please perform the option board installation in the state that removed power supply cord from the main body of vacuum gauge.

The installation of the option board

1.Please remove top surface panel. Remove the IO connector that have already possessed from a panel, a board.

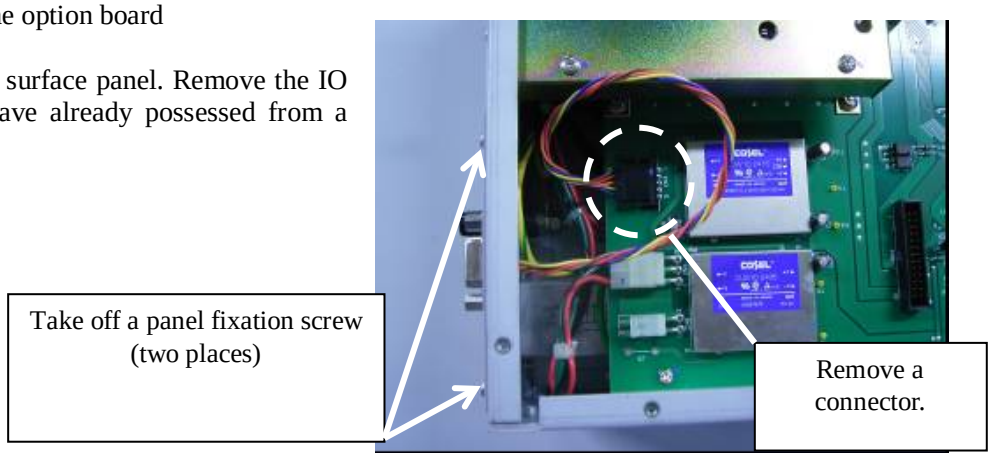

2.Please install the harness which is attached to an option board on a board (two places). Install an attached spacer.

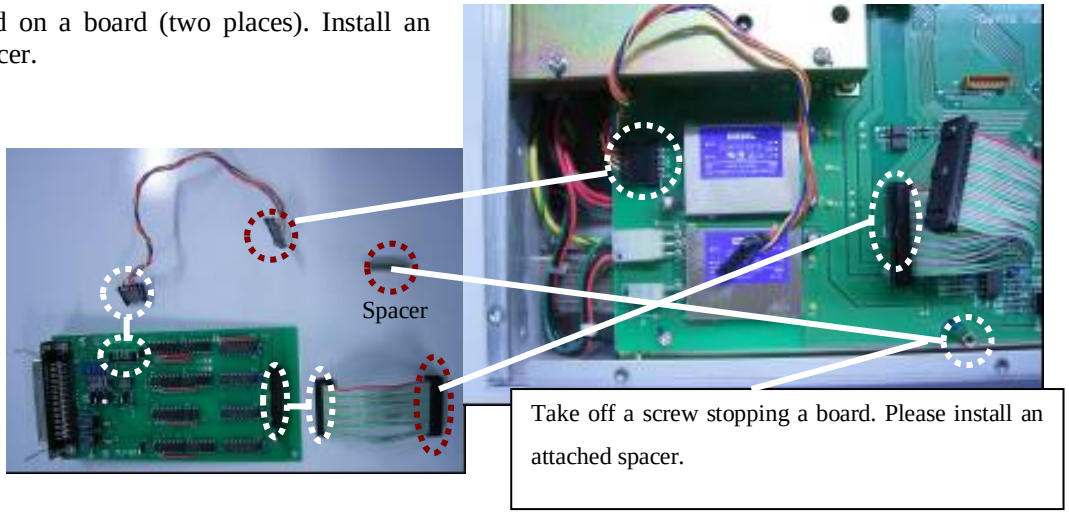

3.Please insert the main body of option board from the rear panel side. Connect harness (two places). Fix a board with a screw to rear panel (two places), a spacer.
Install top surface panel.

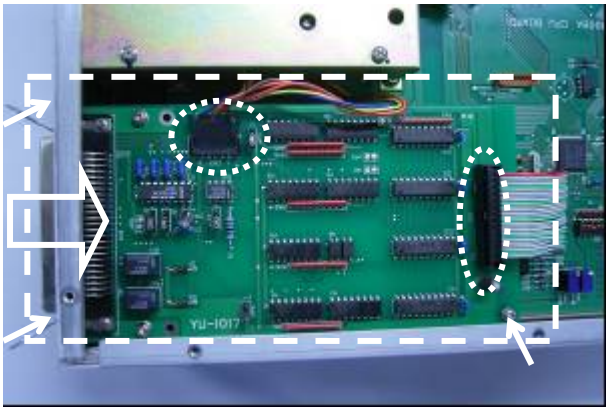

10.3. EXT-I/O Connector

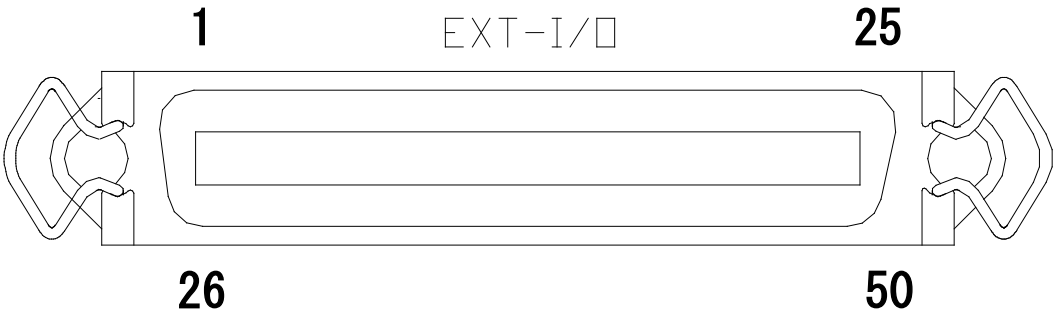

Input/output connector pin assignment

Terminal No.	Signal identification		Terminal No.	Signal identification	
1	SET1 COM	(OUT-PUT)	26	SET2 COM	(OUT-PUT)
2	SET1 a contact	(OUT-PUT)	27	SET2 a contact	(OUT-PUT)
3	SET1 b contact	(OUT-PUT)	28	SET2 b contact	(OUT-PUT)
4			29		
5	EXT-OUT COM	(OUT-PUT)	30	PRESSURE・DATA A-b0	(OUT-PUT)
6	POWER ON / OFF	(OUT-PUT)	31	PRESSURE・DATA A-b1	(OUT-PUT)
7	FILAMENT ON / OFF	(OUT-PUT)	32	PRESSURE・DATA A-b2	(OUT-PUT)
8		(OUT-PUT)	33	PRESSURE・DATA A-b3	(OUT-PUT)
9			34	PRESSURE・DATA B-b0	(OUT-PUT)
10	DEGAS ON / OFF	(OUT-PUT)	35	PRESSURE・DATA B-b1	(OUT-PUT)
11	EMISSION・VALID OK / NG	(OUT-PUT)	36	PRESSURE・DATA B-b2	(OUT-PUT)
12	DATA・VALID OK / NG	(OUT-PUT)	37	PRESSURE・DATA B-b3	(OUT-PUT)
13	PRESSURE・DATA − / ＋	(OUT-PUT)	38	PRESSURE・DATA C-b0	(OUT-PUT)
14	PRESSURE・DATA C-b3	(OUT-PUT)	39	PRESSURE・DATA C-b1	(OUT-PUT)
15	PRESSURE・DATA D-b0	(OUT-PUT)	40	PRESSURE・DATA C-b2	(OUT-PUT)
16	RS-232C TXD		41	RS-232C GND	
17	DEGAS ON / OFF	(IN-PUT)	42	LOCAL / REMOTE	(IN-PUT)
18	EXT-PROTECT OK / NG	(IN-PUT)	43	FILAMENT ON / OFF	(IN-PUT)
19	EXT- 5V INPUT-COM	(IN-PUT)	44		
20	EXT-24V INPUT-COM	(IN-PUT)	45	FILAMENT 2 / 1	(IN-PUT)
21			46	OFF SET ON / OFF	(IN-PUT)
22	RS-232C RXD		47		
23	GND		48	GND	
24	GND (REC-OUT -)		49	GND	
25	REC-OUT +	(OUT-PUT)	50		

- A, B, C and D in PRESSURE·DATA A-b0 etc. are equal to «A. B × 10 ± DC» on the indicator.
- The ☐ display in the "Signal Identification" indicates the LOW (short, negative logic) status.

10.4. External Digital Output

The operating state, such as measured pressure value, filament ON/OFF status, DEGAS ON/OFF status, etc. are output to outside as digital signals (negative logic).

The output form is the open collector output of emitter common. The capacity of the transistor is such that the maximum voltage between the collector and emitter is 24 V, the collector maximum current is 50 mA and the Saturation voltage is 1 V.

(photocoupler: equivalent to TLP-523)

The standard setting of emitter common is pin 5 «EXT-OUT COM» of the EXT-I/O connector.

Note: «EXT-OUT COM» is normally insulated from internal ground. To use it on common ground, open the top panel of the controller and connect ″HP4″ installed on the rear panel side to 1-2 side by means of a jumper wire. Refer to 3.6. Or connect pin 5 of the EXT-I/O connector and one of 23, 24, 48 and 49 of ground by means of a jumper wire (short). (Normally, output between pin 5 of the EXT-I/O connector and each signal line)

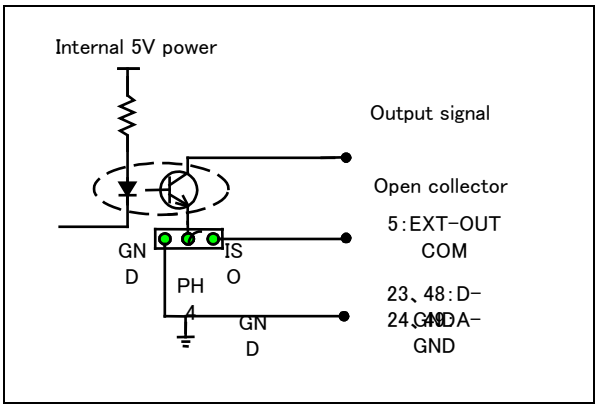

Fig. 10-2 shows the digital output internal circuit. ″HP4″ on the board has been connected to the ″2-3″ side by means of a jumper wire before shipment from the factory.

Note: ANALOG GND and DIGITAL GND are common inside.

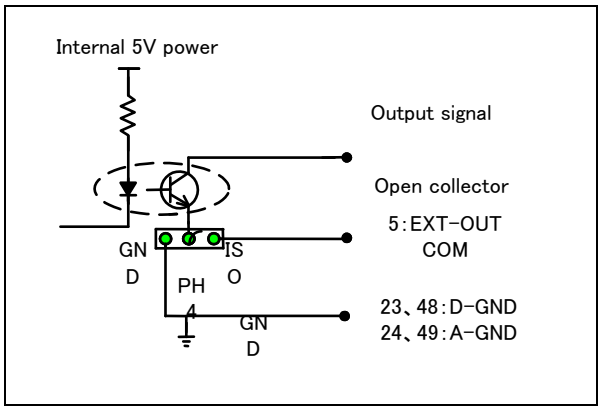

Fig. 10-2 Digital output internal circuit

The measured output value is output by the BCD code. The relationship between the displayed value and the output data is as shown below.

In the mantissa part 3-digits display, the 2nd digit of the decimal point is not output (truncated).

When the displayed value is (A. B × 10 ± DC):

Data of A is output by the BCD code at the output terminals of A-b0 to A-b3, where A-b0 is the least significant bit of the four-digit numeral.

Data of B is output by the BCD code at the output terminals of B-b0 to B-b3, where B-b0 is the least significant bit of the four-digit numeral.

Data of C is output by the BCD code at the output terminals of C-b0 to C-b3, where C-b0 is the least significant bit of the four-digit numeral.
Data of D is output by the BCD code at the output terminals of D-b0 to D-b3, where D-b0 is the least significant bit of the four-digit numeral.
Data valid of the display value (A. B × 10 ± DC) and data rewriting time chart are as shown in Fig. 10-3 Data valid signal (strobe signal) actuation chart and Fig. 10-4 Data rewriting time chart-1.
Data are output at intervals of about 100 ms, in which data are rewritten at intervals of 1 ms.

CAUTION: If data are loaded during data rewriting (DATA VALID Hi), correct displayed values cannot be loaded.

Fig. 10-3 Data valid signal (strobe signal) actuating chart

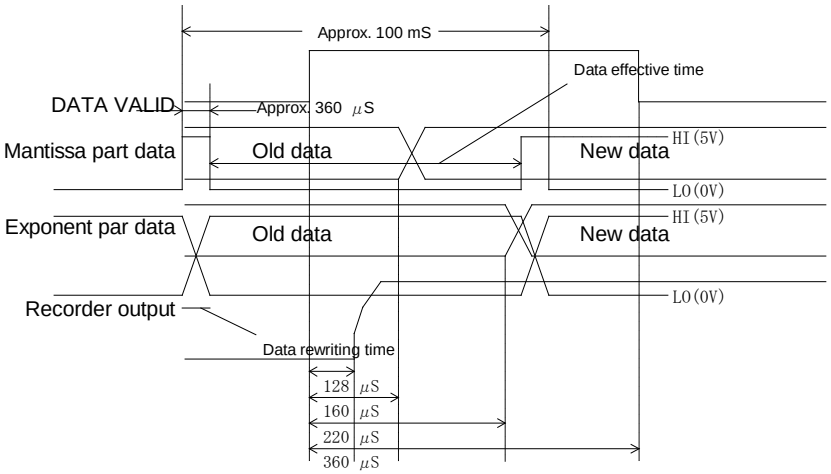

Fig. 10-4 Data rewriting time chart

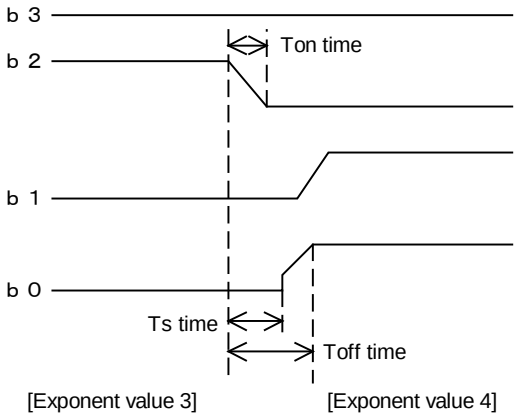

Fig. 10-5 Data rewriting detailed time chart-2

The DATA-VALID signal is 360 μsec in duration. The transistor operating time varies with the collector current fed to the open collector.

The time required to reach the Lo status from the Hi status is given as ″Ton time″ and the time required to reach the Hi status from the Lo status is given as ″Toff time″.

The ″Ton″ time is the transistor charge discharging time and the ″Toff″ time is the transistor charging time. Therefore, it varies with the load resistor connected to the open collector. In order to terminate all data change within the DATA-VALID signal time, set the load resistor below the following value:

Load resistance below 48 kΩ at 24 V
Load resistance below 10 kΩ at 5 V

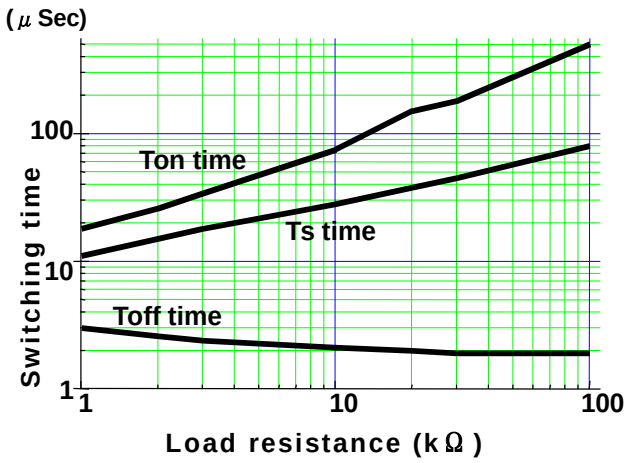

Fig. 10-6 Output transistor switching time

10.5. External Control Input

(1) When 5V internal power supply is used

Used when turning ON/OFF the filament, degassing or other from outside.

As standard setting, each input signal is connected to the 5V internal power supply by connecting the jumper wire "1-2" of "HP3" (shorting).

Refer to external control using the internal power supply (Fig. 10-7) and connect the ANALOG GND terminal or DIGITAL GND terminal (23, 24, 48, 49) and each signal by means of a relay contact or open collector.

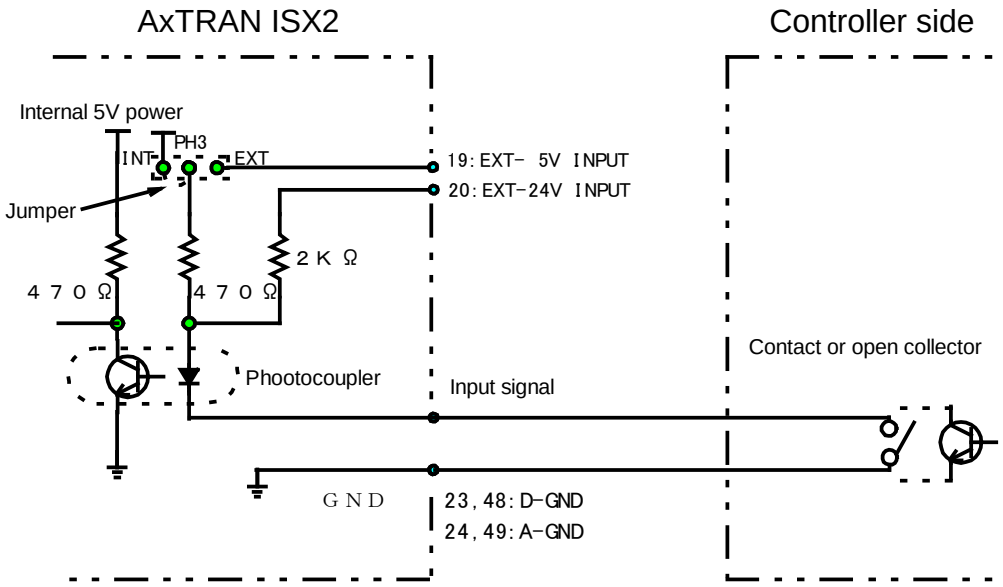

Fig. 10-7 External control using internal power supply

(2) When external 5V or 24V power supply is used

To electrically isolate external operation from the internal power supply, connect the No. 2 and No. 3 of "HP3" by means of a jumper wire (short).

In this case, an external 5V or 24V power supply is required.

When using it, connect EXT-5V INPUT (pin 9) or EXT-24V INPUT (pin 20) terminal to the plus side of the controller power according to the line voltage on the controller side.

Referring to external control using the external power supply in Fig. 10-8, connect the minus side (GND) of the power supply on the controller side and the terminal of each signal by means of a relay contact or open collector.

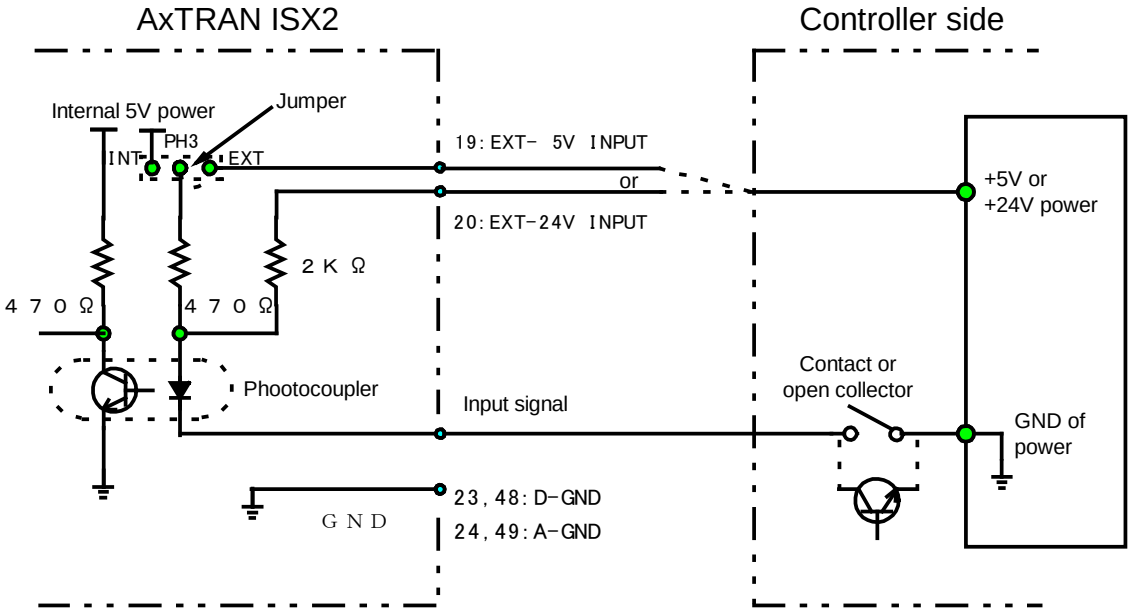

Fig. 10-8 External control using external power supply

10.6. Method of External Control

For external control, follow the time chart in "Fig. 10-9 Method of external control".

(1) Before external operation, select the REMOTE mode.

(2) Then perform filament ON/OFF and DEGAS ON/OFF operation in that order.

However, DEGAS is not turned ON unless the filament is ON.

(3) Upon completion of all operations, change over the mode to LOCAL.

CAUTION: Do not input each operation simultaneously. If input simultaneously, either operation may not be actuated. Provide a time difference between actions.

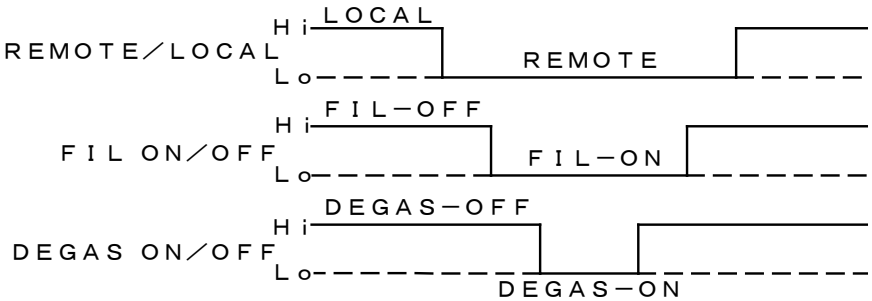

Fig. 10-9 Method of external control

* The filament can be protected with EXT-PROTECT from outside. In this case, it is active regardless of the REMOTE/LOCAL status.

Refer to Fig. 10-9 for the display that appears when activated.

If EXT-PROTECT is restored with the filament turned ON in the LOCAL mode, the filament will be turned OFF again.

If the filament is ON in the REMOTE mode and the EXT-PROTECT is restored, the filament will stay ON unless it is turned OFF.

11. HOW TO USE COMMUNICATION (RS-232C)

11.1. Communication Specifications

11.1.1. Key specifications

Communication system	Full duplex
X parameter	Ineffective
Data bit length	8 bits
Stop bit length	1 bit
Code	ASCII
Baud rate	9600, 19200, 38400 bps
S parameter	Ineffective
Baud rate	9600/19200/38400 bps
DEL code processing	BS code conversion
Return key processing	C_R+L_R code processing
Receive C_R code processing	When C_R is received, return + line feed
Japanese shift code	KI = (1A70)
	KO = (1A71)
Transmission distance	15 m

11.1.2. Baud rate setting

Refer to "8.10 Baud Rate Setting".
It is factory set at 9600 bps.

11.1.3. Communication cable/connector

* The connector is located on the rear of the gauge.

11.1.3.1. Output signal connector

Amphenol 50-pin connector
Signal and assignment: (complies with RS-232C standard)

Pin No.	Signal identification	
41	Ground for safety	(GND)
16	Transmit data	(TD)
22	Receive data	(RD)
41	Ground for signal	(GND)

11.1.3.2. Connecting the communication cable

This gauge does not come with the RS-232C communication cable.

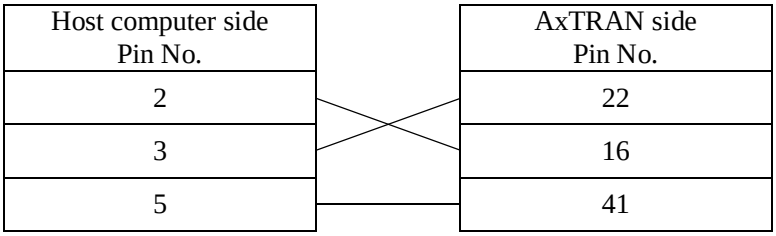

11.2. List of Commands

Command	Parameter	Response	Data	Explanation of function
′RE′	-	′OK′ or ′NG′	-	Sets remote status
′L0′	-	′OK′ or ′NG′	-	Sets local status
′EM′	-	-	′OK′ or ′NG′	Reads emission valid status
′F0′	-	′OK′ or ′NG′	-	Turns OFF filament
′F1′	-	′OK′ or ′NG′	-	Turns ON filament
′FA′	-	′OK′ or ′NG′	-	Selects filament - 1
′FB′	-	′OK′ or ′NG′	-	Selects filament - 2
′GS′	-	-	′AxTRAN′	Reads type of control
′D0′	-	′OK′ or ′NG′	-	Turns OFF degassing
′D1′	-	′OK′ or ′NG′	-	Turns ON degassing
′DS′	′XX′	′OK′ or ′NG′	-	Sets degassing AUTO mode time in ′XX′ minutes
′SE′	′X.XXE±XX′	′OK′ or ′NG′	-	Sets sensitivity factor
′SR′	′X.XX′	′OK′ or ′NG′	-	Sets specific sensitivity factor
′R1′	-	-	′X.XXE-XX′	Reads data of setpoint-1
′R2′	-	-	′X.XXE-XX′	Reads data of setpoint-2
′S1′	′X.XXE-XX′	′OK′ or ′NG′	-	Sets setpoint-1
′S2′	′X.XXE-XX′	′OK′ or ′NG′	-	Sets setpoint-2
′SP′	-	-	′1-X/2-X′	Reads setpoint-1 and -2 status
′RP′	-	-	′X.X E-XX′	Reads measured pressure data
′PR′	-	-	′ON′ or ′OF′	Reads EXT-PROTECT status
′T0′	′XX′	′OK′ or ′NG′	-	Sets filter
′T1′	-	-	′XX′	Reads filter setting
′OF′	-	′OK′ or ′NG′	-	Starts offset adjustment
′ST′	-	-	′XX′	Reads control status
′RT′	-	′OK′ or ′NG′	-	Resets error
′LI′	-	′OK′ or ′NG′	-	Selects recorder ″LIN″
′LG′	-	′OK′ or ′NG′	-	Selects recorder ″LOG″
‘RS’		‘*XXXXXXX*’		Reads action status

11.3. Explanation of Command Action

11.3.1. Changing over remote/local control

Command	Parameter	Response	Data	Explanation of function
'RE'	-	'OK' or 'NG'	-	Sets remote status
'L0'	-	'OK' or 'NG'	-	Sets local status

Send 'RE' command when the AxTRAN is used in the remote (RS-232C) mode. If this setting is OK, 'OK' is sent back in response and, if it 'NG', 'NG' is sent back in response.
To clear the remote mode (RS-232C), send 'L0' command. If this setting is OK, 'OK' is sent back in response and, if it is NG, 'NG' is sent back in response.

11.3.2. Reading the emission valid signal

Command	Parameter	Response	Data	Explanation of function
'EM'	-	-	'OK' or 'NG'	Reads emission valid status

To read the emission valid signal status, send 'EM' command. If emission current is OK, 'OK' is sent back in response and, if it is NG, 'NG' is sent back in response.

11.3.3. Control of filament

Command	Parameter	Response	Data	Explanation of function
'F0'	-	'OK' or 'NG'	-	Turns OFF filament
'F1'	-	'OK' or 'NG'	-	Turns ON filament
'FA'	-	'OK' or 'NG'	-	Selects filament - 1
'FB'	-	'OK' or 'NG'	-	Selects filament - 2

To turn OFF the filament, send 'F0' command. If this setting is OK, 'OK' is sent back in response and, if it is NG, 'NG' is sent back in response.
To turn ON the filament, send 'F1' command. If this setting is OK, 'OK' is sent back in response and, if it is NG, 'NG' is sent back in response.
To use filament-1, send 'FA' command. If this setting is OK, 'OK' is sent back in response and, if it is NG, 'NG' is sent back in response.
To use filament-2, send 'FB' command. If this setting is OK, 'OK' is sent back in response and, if it is NG, 'NG' is sent back in response.

11.3.4. Control of degassing

Command	Parameter	Response	Data	Explanation of function
'D0'	-	'OK' or 'NG'	-	Turns OFF degassing
'D1'	-	'OK' or 'NG'	-	Turns ON degassing
'DS'	'XX'	'OK' or 'NG'	-	Sets degassing AUTO mode time in 'XX' minutes

To turn OFF degassing, send 'D0' command.
If this setting is OK, 'OK' is sent back in response and, if it is NG, 'NG' is sent back in response.
To turn ON degassing, send 'D1' command.
If this setting is OK, 'OK' is sent back in response and, if it is NG, 'NG' is sent back in response.
To set the time of AUTO mode (automatically terminate degassing at a set time) in degassing, send 'DS' command.
Send 'XX' as parameter. 'XX' is 01 to 99 minutes.
(Degassing is automatically turned OFF 'XX' minutes after the DEGASS-ON command is entered.)
If this setting is OK, 'OK' is sent back in response and, if it is NG, 'NG' is sent back in response.

11.3.5. Reading the gauge status

Command	Parameter	Response	Data	Explanation of function
′GS′	-	-	′AxTRAN′	Reads the type of control

To know what the currently connected controller is, send ′GS′ command. The controller sends back ′AxTRAN′ in response to this inquiry.

11.3.6. Setting sensitivity factor

Command	Parameter	Response	Data	Explanation of function
′SE′	′X.XXE±XX′	′OK′ or ′NG′	-	Sets sensitivity factor

To set the pressure measurement sensitivity factor arbitrarily, send ′SE′ command.
Send ′X.XXE ± XX′ as parameter.
If this setting is OK, ′OK′ is sent back in response and, if it is NG, ′NG′ is sent back in response.
(In the absence of setting by communication, the value set on the front panel is effective.)

11.3.7. Setting specific sensitivity factor

Command	Parameter	Response	Data	Explanation of function
′SR′	′X.XX′	′OK′ or ′NG′	-	Sets specific sensitivity factor

To set the specific sensitivity factor of pressure measurement, send ′SR′ command.
Send ′X. XX′ as a parameter.
If this setting is OK, ′OK′ is sent back in response and, if it is NG, ′NG′ is sent back.
(In the absence of setting through communication, the value set on the front panel is effective.)

11.3.8. Setting and reading the setpoint

Command	Parameter	Response	Data	Explanation of function
′R1′	-	-	′X.XXE-XX′	Reads data of setpoint-1
′R2′	-	-	′X.XXE-XX′	Reads data of setpoint-2
′S1′	′X.XXE-XX′	′OK′ or ′NG′	-	Sets setpoint-1
′S2′	′X.XXE-XX′	′OK′ or ′NG′	-	Sets setpoint-2
′SP′	-	-	′1-X/2-X′	Reads the status of setpoint-1 and -2

To know the value set to setpoint-1, send ′R1′ command.
The controller sends back ′X.XXE±XX′ in response to this inquiry. To know the value set to setpoint-2, send ′R2′ command.
The controller sends back ′X.XXE±XX′ in response to this question.
To set the value of setpoint-1 arbitrarily, send ′S1′ command.
Send ′X.XXE±XX′ as parameter.
If this setting is OK, ′OK′ is sent back in response and, if it is NG, ′NG′ is sent back in response.
(In the absence of setting by communication, the value set from the front panel is effective.)
To set the value of setpoint-2 arbitrarily, send ′S2′ command.
Send ′X.XXE±XX′ as parameter.
If this setting is OK, ′OK′ is sent back in response and, if it is NG, ′NG′ is sent back in response.
(In the absence of setting by communication, the value set from the front panel is effective.)
To know the operational status of setpoint-1 and -2, send ′SP′ command.
The controller sends back ′1-X, 2-X′ in response to this inquiry.
(X=0 indicates that the setpoint is OFF and X=1 indicates that the setpoint is ON.)
(Example: ′1-1, 2-0′ indicates that setpoint-1 is ON and setpoint-2 is OFF.)

11.3.9. Reading the measured pressure value

Command	Parameter	Response	Data	Explanation of function
′RP′	-	-	′X-XE-XX′	Reads measured pressure data

To know the measured pressure value, send ′RP′ command.
The controller sends back ′X.XXE±XX′ in response to this inquiry.
(If the filament is OFF status, ′0.00E-10′ is sent back.)

11.3.10. Reading the external protection status

Command	Parameter	Response	Data	Explanation of function
′PR′	-	-	′ON′ or ′OF′	Reads the EXT-PROTECT status

To know the external protection activated status, send ′PR′ command.
The controller sends back ′ON′ or ′OF′ in response to this inquiry.
(′ON′ indicates protection ON status and ′OF′ indicates protection OFF status.)

11.3.11. Setting of filter

Command	Parameter	Response	Data	Explanation of function
′T0′	′XX′	′OK′ or ′NG′	-	Sets filter
′T1′	-	-	′XX′	Reads filter setting

To set a filter, send ′D0′ command.
Send ′XX′ as parameter. ′XX′ is 00, 01, 30, 60 or 90.
To know the value of the set filter, send ′T1′ command.
In the case of 3-digit display, the controller sends back ′XX′ in response to this inquiry.
(In the absence of setting through communication, the value set on the front panel is effective.)

11.3.12. Control of offset

Command	Parameter	Response	Data	Explanation of function
′OF′	-	′OK′ or ′NG′	-	Starts offset adjustment

To start offset adjustment, send ′OF′ command.
If this setting is OK, ′OK′ is back in response and, if it is NG, ′NG′ is sent back.

11.3.13. Reading the controller status

Command	Parameter	Response	Data	Explanation of function
′ST′	-	-	′XX′	Reads control status

To read the controller status, send ′ST′ command.
The controller sends back ′XX′ in response to this inquiry.
See the table below for details of ′XX′.

Value	Content	Value	Content
00	Filament OFF	06	Initialize mode ON
01	Filament 1 ON	11	Filament burnout, connector not connected
02	Filament 2 ON	12	Setting error
03	Filament protecting action	13	Filament protecting action during degassing
04	Degassing ON	14	Filament burnout during degassing
05	Offset mode ON		

11.3.14. Error resetting

Command	Parameter	Response	Data	Explanation of function
′RT′	-	′OK′ or ′NG′	-	Resets error

To reset controller error, send ′RT′ command.
If this setting is OK, ′OK′ is sent back in response and, if ′NG′, ′NG′ is sent back in response.

11.3.15. Setting the recorder output

Command	Parameter	Response	Data	Explanation of function
′LI′	-	′OK′ or ′NG′	-	Selects recorder ″LIN″
′LG′	-	′OK′ or ′NG′	-	Selects recorder ″LOG″

To use the recorder ′LIN′, send ′LI′ command.
If this setting is OK, ′OK′ is sent back in response and, if it is NG, ′NG′ is sent back in response.
To use the recorder ′LOG′, send ′LG′ command.
If this setting is OK, ′OK′ is sent back in response and, if it is NG, ′NG′ is sent back in response.
(In the absence of setting through communication, the value set from the front panel is effective.)

11.3.16. Reading action status

Command	Parameter	Response	Explanation of function
‘RS’		‘*XXXXXXX*’	Reads action status

‘RS’command respose details:
X1 + X2 + X3 + ... + X7 and data of seven items (X:0/1) is one set, and it is replied.

The details of data are as follows.

Items		0	1
X1	Fil 2/1（Setting condition）	Fil2	Fil1
X2	Fil ON/OFF	OFF	ON
X3	Em Valid	NG	OK
X4	DeGas　ON/OFF	OFF	ON
X5	PROTECT (Pressure protection）	OFF	ON
X6	SetPoint2　ON/OFF	OFF	ON
X7	SetPoint1　ON/OFF	OFF	ON

11.4. Cautions in Operation

(1) Operation from the front panel is not accepted after the remote status is set up by RS-232C communication.
(2) Operation from an external input is not accepted after the remote status is set up by RS-232C communication.
<u>However, EXT-PROTECT is active.</u>
(3) If the filament is ON (including degassing ON) when the remote status is set up by RS-232C communication, the action will be turned OFF.
(4) If the filament is ON (including degassing ON) when the remote status is reset from the remote status to the local status by RS-232C communication, control returns to the local status after turning OFF the action.
(5) If the RS-232C remote status is set up from the host computer and the power to the host computer is turned OFF before it is reset to the local status, the vacuum gauge side holds the remote status. To reset it, enter a local command from the host computer again or turn OFF the power to the vacuum gauge.

12. TROUBLESHOOTING

In case of trouble, take corrective actions referring to this troubleshooting chart.

Before troubleshooting, turn off the power.

CAUTION	Turn off power.

● Turning ON the power does not light the display.

Possible cause	Corrective action
The power cord is disconnected.	Check the 3-pin outlet plug and inlet connector on the rear panel of the controller for connection, and reconnect it.
The power cord is broken.	Check the 3-pin power cord wires for continuity and insulation using a circuit tester.
The line voltage is below the specified range.	Check if the line voltage is within the specified range using a circuit tester. (line voltage: 85 VAC to 240 V)
The fuse in the rear panel has blown out.	Take out the fuse box by turning the screw with a Philips screwdriver and check for continuity using a circuit tester. If the fuse has blown out: If the cause is a momentary overcurrent, the problem can be solved by replacing the fuse, but if an overcurrent is flowing for other cause, it will blow out again. Locate the real cause of trouble from other items.
The power line in the controller is disconnected.	Disconnection or short has occurred in the power line in the controller (inline filter, wiring, power switch, transformer, switching power supply, etc.) Contact ULVAC for inspection and repair.
Trouble has occurred in the controller due to erroneous wiring of external I/O connector.	Element in the controller was damaged by erroneous wiring of the wire to the external I/O connector. Or the line voltage drops. Correct the wiring. Contact ULVAC for inspection and repair.
The cable between the power supply board and controller board is disconnected.	The cable was disconnected by vibration in transit. Remove the top and bottom panels of the controller to check where it is disconnected. Reconnect the disconnected cable.

Possible cause	Corrective action
The cable between the controller power supply board and the display board is disconnected.	The cable was disconnected by vibration in transit. Remove the top and bottom panels of the controller to check where it is disconnected. Reconnect the disconnected cable.
CPU is out of control due to external noise.	Turn ON the power again. Examine the corrective action against noise separately.

● Pressure cannot be measured by turning ON the filament. (The [FIL] lamp on the front panel is blinking.)

Possible cause	Corrective action
The emission current value is not normal.	Examine the real 5cause from other items. (See page.60)
The filament has blown out.	Check the wiring between the filament and electrode for continuity with a circuit tester. (See page 72.) Change over the filament to the other. If the filament blows out after operation above the measurable pressure range for many hours, the sensor head interior may be contaminated. In this case, the emission current value may not be normal even if the other filament is in continuity. In this case, replace the sensor head.
Insulation between the electrodes of the sensor head has failed.	Check insulation between the electrodes of the sensor head and between the electrodes and the outside wall. (The Megger indication should be infinite.) (See page 72.) If insulation failure is verified, replace the sensor head.
The sensor head cable is disconnected or insulation failure has occurred.	Check insulation between electrodes of the sensor head using a Megger. Also check the connector at both ends for continuity using a circuit tester. (See page 75.) Note: After checking the ion collector (coaxial contact) for insulation using a Megger, short the points measured by the Megger to discharge the charge. If it is reconnected without discharging, the DC amplifier of the controller may be damaged. Replace or repair the sensor head cable.
The sensor head is contaminated or its filament has worn out.	Replace the sensor head with another one and check the symptom again. If OK with another sensor head, the sensor head is faulty. Replace the sensor head.

● Pressure cannot be measured with the filament turned ON. (The [FIL] lamp on the front panel is lit.)

Possible cause	Corrective action
Insulation between the electrodes of the sensor head has failed.	Check insulation between the electrodes of the sensor head and between the electrodes and the outside wall using a Megger. (The Megger indication should be infinite.) (See page 72.) If insulation failure is verified, replace the sensor head.
The sensor head cable is disconnected or insulation has failed.	Check insulation between electrodes of the sensor head using a Megger. Also check the connector at both ends for continuity using a circuit tester. (See page 75.) Note: After checking the ion collector (coaxial contact) for insulation using a Megger, short the points measured by the Megger to discharge the charge. If it is reconnected without discharging, the DC amplifier of the controller may be damaged.

	Replace or repair the sensor head cable.
Sensor head sensitivity has lowered noticeably.	Change the sensor head with another one and check the symptom. If OK with another sensor head, the sensor head is faulty. Replace the sensor head.

● The filament is turned OFF immediately after it is turned ON or the filament cannot be turned ON.

Possible cause	Corrective action
Filament protection is activated because of high pressure.	Check pressure using another type of vacuum gauge, e.g. Pirani gauge.
EXT-PROTECT is activated.	Reset the PROTECT signal. Turn off the signal ON signal and then turn it ON.
Remote operation status is set up from RS-232C.	In the [REMOTE] operation, operation from the front panel is not feasible. Turn on the filament through RS-232C. Or reset [REMOTE] from the front panel.

Possible cause	Corrective action
Remote operation status is set up by external I/O connector.	In the [REMOTE] mode, operation from the front panel is not feasible. Turn on the filament from the external I/O connector. Reset [REMOTE] from the front panel.

● Measured pressure differs largely from expected value.

Possible cause	Corrective action
Sensor head cable has blown out or insulation has failed, resulting in leakage current.	Check insulation between electrodes of the sensor head. Also check continuity using a circuit tester. (See page 75.) Note: After making insulation test of the ion collector line (coaxial contact) by a Megger, short the portion checked with a Megger by means of a jumper wire to discharge the charge. If the sensor head cable is connected to the measuring unit without taking this action, the sensor head may fail. If the cable is found defective, replace or repair it.
Insulation failure has occurred between electrodes of the sensor head, resulting in leakage current.	Check insulation between electrodes of the sensor head and outside wall by a Megger. (The Megger indication must be infinite.)(See page 72.) If the sensor head is found defective, replace or repair it.
Sensor head is contaminated or sensitivity has lowered markedly.	Change the sensor head with another one and check symptom. If there is no problem with another sensor head, the problem is in the sensor head now used.

Gas being measured is not nitrogen or air. The sensitivity setting is incorrect.	The controller and sensor head are normal. If measurement is made using gas other than nitrogen or air, set the sensitivity factor. (See page 22.)
The actual pressure differs from the expected value.	The actual pressure differs from the expected value.

● Measurement value drifts.

Possible cause	Corrective action
Sensor head is contaminated or sensitivity has lowered markedly.	Change the sensor head with another one and check the symptom. If there is no problem with another sensor head, the problem is in the sensor head now used.
Sensor head cable is vibrating.	If the sensor head cable is always subjected to vibration, the indicated value may drift because of the friction electromotive force in the sensor head cable. Re-examine the method of laying the cable.
Sensor head cable is electromagnetically induced (by external noise).	Check the place of laying the sensor head cable or make check with a component that can be a source of noise. If the sensor head cable is responsible, re-examine the method of laying cable. Also examine measures against noise.
Line voltage is fluctuating.	Check line voltage by a circuit tester. (line voltage: 85 to 240 VAC)
Filament is turned ON above the measurable pressure range.	Check pressure using a Pirani gauge or other vacuum gauge. If the pressure is too high, gas cannot be ionized normally and the ion current generated will apparently be on the same order as that when pressure is low. Thus, the filament protecting function is not activated.
GND potential is fluctuating.	Check control ground and ground of the sensor head mounted position by a circuit tester or oscilloscope. Take actions to improve the GND wiring or install the controller or sensor head afloat.
Sensor head cable has blown out or insulation failure has occurred, resulting in leakage current.	Check insulation between electrodes of the sensor head cable using a Megger. Also check continuity across the connector using a circuit tester. (See page 75.) Note: After checking the ion collector (coaxial contact) for insulation using a Megger, short the portions checked with Megger by means of a jumper wire. If the cable is connected to the sensor head without shorting them, the sensor head may fail. If the cable is found defective, replace or repair it.
Insulation failure has occurred between electrodes of the sensor head or leakage current has occurred.	Check insulation between electrodes of the sensor head and the outside wall using a Megger. (Megger indication should be infinite.) (See page 72.) If insulation failure is confirmed, replace the sensor head with a new one.

● Set point signal is not given.

Possible cause	Corrective action
[SET*] lamp on front panel is lit.	Check continuity between output contacts using a circuit tester, with external devices disconnected. If the contact is not in continuity though actuated, the relay has failed. Contact ULVAC for inspection and repair. The minimum operating current of the relay used for output is 10 mA. At a current below this value, relay may not be in continuity electrically though mechanically actuated.
Signal drops momentarily because the emission current of the sensor head can hardly be obtained normally.	If the emission current is momentarily NG, the set point will also be turned OFF simultaneously. Replace the sensor head with a new one.
Erroneous wiring or broken wire of the EXT-I/O connector.	Correct the wiring and check continuity using a circuit tester.(See page 39.)

● Control operation from I/O connector cannot be performed.

Possible cause	Corrective action
Erroneous wiring or broken wire of the EXT-I/O connector.	Correct the wiring and check continuity using a circuit tester.(See page 39.)
Erroneous operating procedure	Perform operation in the REMOTE status. (See page 45.)
Photocoupler current is too low or cannot be flown.	The circuit feeds 10mA current to the photocoupler. When an external power supply is used, make sure the current capacity is sufficient and test the resistance is not too high by wiring. If the filament signal is turned ON/OFF using a relay, make sure the minimum operating current of the relay is not more than 10 mA.
Failure of input circuit	Contact ULVAC for inspection and repair.

● Digital output cannot be read.

Possible cause	Corrective action
Erroneous wiring or broken wire of the EXT-I/O connector.	Correct the wiring and check continuity using a circuit tester.(See page 39.)
Erroneous wiring or broken wire of the EXT-I/O connector common wiring.	Common setting before shipment is pin 5. Each digital output signal is turned ON/OFF between common electrodes. Connect output common to pin 5, or change the common setting or connect GND and pin 5 in the connector by means of a jumper wire. (See page 40.)
No voltage is output if output signal is not connected by pull-up method.	Voltage cannot be read with the type that does not use the pull-up method.
Polarity of electrode to be connected is incorrect.	When relay contact input unit is used, it is often the case that one side is connected to the power supply. In this case, connect the common side of the gauge to the minus side of the power supply and each signal to the plus side. If an inverse voltage is applied, the internal element may fail.
Line voltage connected is not correct.	100VAC power is connected to some units. In this case, the internal element will fail.
Failure of output circuit	Contact ULVAC for inspection and repair.

● Display and recorder output differ.

Possible cause	Corrective action
In correct recorder output mode is selected.	Set a correct mode. (See page 33.)
Recorder output is shifted as a whole.	The recorder output may shift for a potential difference if it exists between GND on the signal reading side and GND of the vacuum gauge. Improve GND or add an isolation amplifier between

● Display and BCD output differ.

Possible cause	Corrective action
Erroneous wiring or broken wire of the EXT-I/O connector.	Correct the wiring and check continuity using a circuit tester.(See page 39.)
Data rewriting time has been read.	BCD output is rewritten at intervals of 100 ms. The value is not correct during rewriting (1 ms). Perform processing by DATA VALID signal.(See page 40 **エラー! ブックマークが定義されていません。**.)

● Communication cannot be established.

Possible cause	Corrective action
Cable specifications differ.	RS-232C cables include the straight type and cross type. Use the cross type for this gauge. (See page 46.)
Erroneous wiring or broken wire of cable	Correct the wiring and check continuity using a circuit tester. (See page 46.)
Condition setting is not correct.	Check if settings, such as baud rate, parity, data bit, stop bit, etc., are correct. (See page 46.)

12.1. Cause and measures where emission current doesn't flow

Cause	Measures
Pressure is higher than 10E-3Pa.	Check of exhaust system
The filament has blown out	Replace the sensor head
Consumption of filament	Replace the sensor head
The sensor head's contaminated	Replace the sensor head
Loose connection or disconnection of cable	Reconnection or exchange
Power supply circuit breakdown	Repair

The following five items exist as a basic condition because of the flow of the emission current.

1. Pressure must be 10E-3Pa or less.
2. The necessary electrode bias between the filament and the grid must be impressed.
3. The temperature of the filament must be a necessary temperature.
4. The surface area of the filament must be necessary area.
5. The surface area in the grid must be a necessary area(clean surface area.)

The emission current doesn't flow if not filled as a condition even by this our one.

12.2. About the malfunction indication

When the error occurs , the following are displayed in the front panel.

Display	Content
Err.11	The filament has blown out. Or cable unconnection state.
Err.12	Set error
Err.13	The filament is automatic off in DEGAS.
Err.14	The filament has blown out in DEGAS.

Please push the ENTER key to the display release.

13. APPENDIX

13.1. Principles of Operation

13.1.1. Basic structure of ion gauge

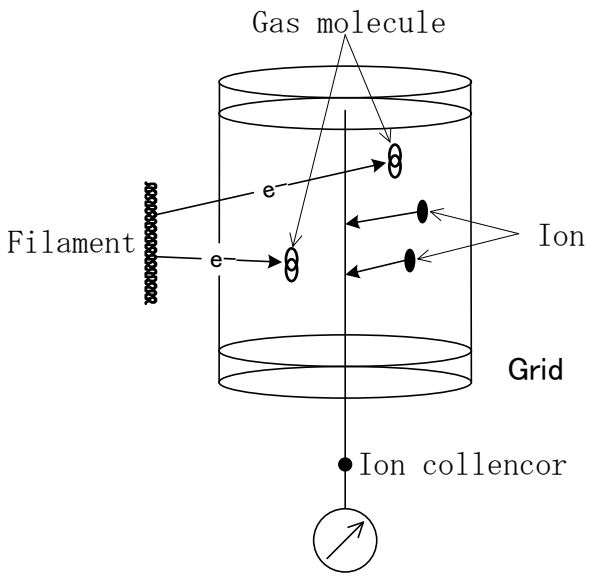

5.88×10⁻⁰⁸Pa
(controller)

B-A type ionization vacuum gauge
(WIN、GI-M etc.)

When gas molecular collide with particles having energy above a certain level, they emit electrons and are turned into ions. This phenomenon is called gas ionization.

Principles of operation of the ionization gauge are explained below referring to the B-A type ionization gauge shown in the figure below.

Thermions emitted from a heated filament are accelerated in the electric field between a filament and grid and the accelerated thermions collide with gas molecules and atoms in the grid, producing ions. These gas ions are collected by the ion collector and are detected as ion current. Since the frequency of collisions of thermions and gas molecules is proportional to the density of gas, the density of gas molecules (pressure of gas) can be known from the number of ions produced.

The following relationship holds between the number of thermoelectrons emitted from the filament (electron current: Ie), number of ions produced (ion current: Ii) and density of gas molecules (pressure: P).

$$Ii = k \cdot Ie \cdot P \quad \text{.....} \quad (1)$$

Ii : Ion current [A]
k : Sensitivity [Pa^{-1}]
Ie : Electron current [A]
P : Pressure [Pa]

In the equation above, sensitivity factor k is normally given for nitrogen.

It is determined by the geometrical structure of the sensor head, voltage applied to each electrode, type of gas, and others.

This gauge indicates the value Ii in the equation above after electrical amplification and calculation. Therefore, if the sensitivity factor k changes, there will be a difference in the vacuum gauge measurement value outputs even if the electron current Ie and pressure P are the same. Representative factors that change the sensitivity factor k include the following.

(1) Type of sensor head
(2) Type of gas
(3) Deterioration of sensor head

The sensor head that can be used with this gauge is the AT type. The sensitivity factor of the AT type ion gauge for nitrogen is as follows.

k : 2.30×10^{-2} [Pa^{-1}]

13.1.2. Problems of ion gauge

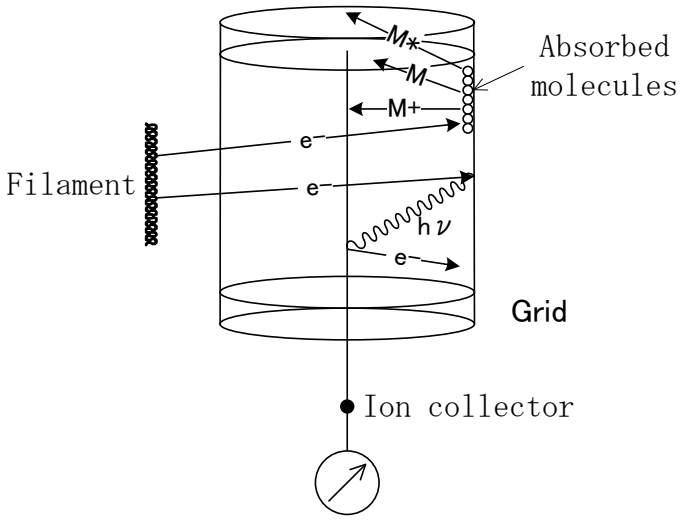

B-A type ionization vacuum gauge
(WIN、GI-M etc.)

The ion gauge has a number of factors that determine its measurable lower limit value.
One is the residual current by soft X-rays.
Soft X-rays are generated when the electrons emitted from the filament collide with the grid. When the ion collector is bathed with soft X-rays, photoelectrons are emitted from the ion collector, which will be energized with a positive current. This current is a residual current, which is one of the factors that determine the measurable lower limit value.
The other is the residual current caused by electron stimulated desorption (ESD) ions.
Bombarded with accelerating electrons, the gas molecules and atoms occluded in the grid surface are desorbed. Types of particles desorbed include neutral particles, excited neutral particles and ions. Of these, those desorbed as ions are detected by the ion collector as residual current, which is one of the factors that determine the measurable lower limit value of the ion gauge.
Relatively active gases (gas that tends to be occluded in the grid surface, for example, water, oxygen, etc.) tend to emit a large amount of ESD ions, while stable gases tend to emit a small amount of ions. When a relatively active gas pressure is measured by a normal ion gauge in an ultra-high vacuum region, several tens of percent of error may arise between the actual pressure and the vacuum gauge indication because the amount of ESD ions emitted is not linearly proportional to the pressure. The figure below is an example showing that there is a difference in indications between the normal ion gauge and AxTRAN vacuum gauge depending on gas specie.

That is, the ESD ion is not only a factor that determines the measurable lower limit value of the ion gauge, but also a factor that produces measurement inaccuracy (error).

Besides these, gas released from the vacuum gauge itself is also regarded as a factor that determines the measurable lower limit, causing pressure measurement error.

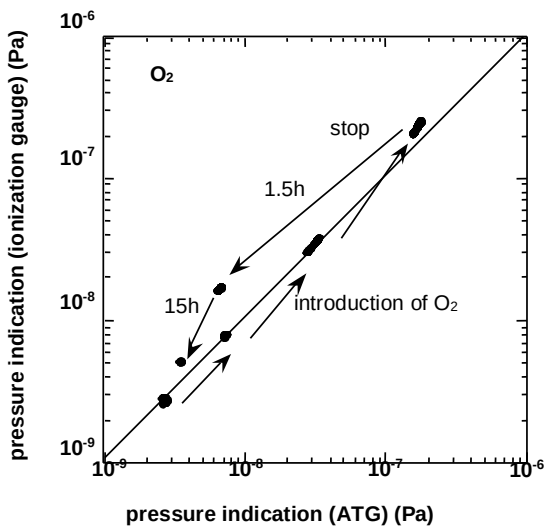

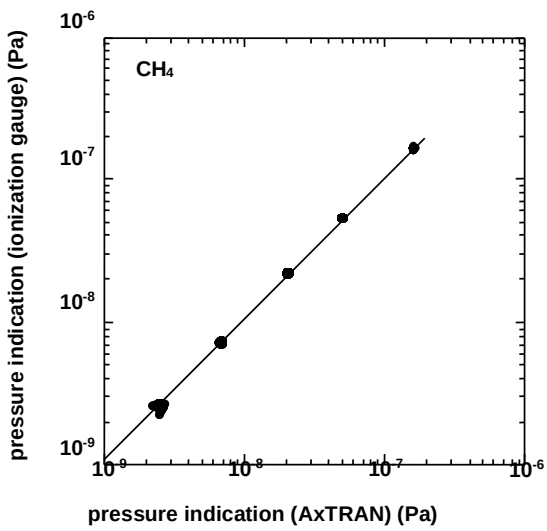

13.1.3. Axial symmetric transmission (AT) gauge

To overcome the problems above, the axial symmetric transmission type (AT) gauge has been developed, in which a Bessel-Box type energy filter is provided between the ionization chamber and ion collector. This gauge is called AxTRAN gauge.

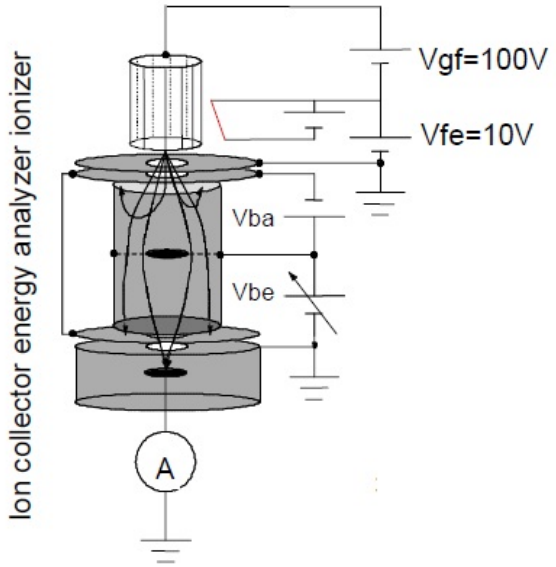

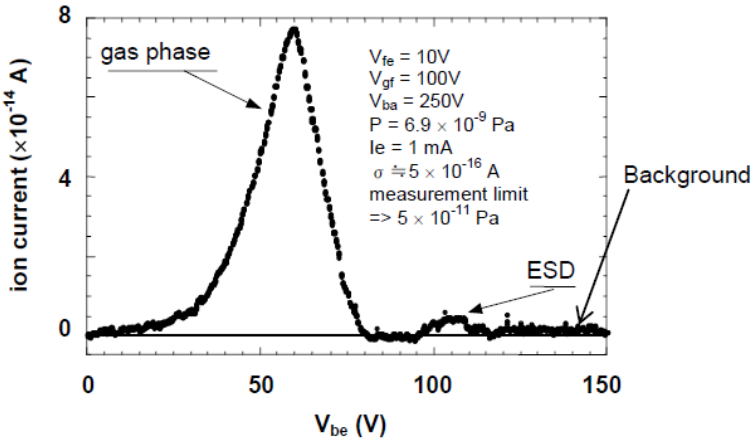

This vacuum gauge features the capability of separating gas ions and ESD ions by using their initial kinetic energies and the geometrical structure of the energy filter that reduces the residual current by soft-rays (the ionization chamber is not visible from the ion collector). Another feature is the capability of measuring and regulating the residual current by soft X-rays that are incident on the ion collector after being reflected in the ion collector and the background signal by offset of the electron amplifier. The background signal is measured by setting Vbe in the figure above to 150 V (potential at which ions are not detected). Normally, pressure is measured by setting it at the maximum value by gas ions (Vbe = 60 V). The residual current and amplifier offset by soft X-rays can be detected by setting the potential of the energy filter at Vbe = 150 V, at which ions are not detected, allowing the offset of the measuring system to be adjusted.

For these reasons, this ion gauge permits pressure measurement with high reliability over a wide range from 10^{-11} Pa to 1×10^{-2} Pa.

In actual operation, the maximum value of the energy spectrum is detected and the optimum value of the pressure measurement condition are set by pressing the ″INT″ switch, and pressing the ″OFFSET″ key sets Vbe to 150 and adjusts and measures the offset of the measuring instrument.

13.1.4. Micro current measurement

This vacuum gauge uses a micro-current current amplifier having a minimum resolution of 0.5 fA (femtoampere: 10^{-15} A)

Measurement of a micro current using such a high sensitivity, high gain amplifier requires a number of cautions.

- High sensitivity, high gain amplifier is very sensitive to temperature.

  Possible reasons for this are the change in characteristics of the amplifier itself, thermal expansion of the cable, current generation due to contraction, and others.

  The ion current measuring system used in the AxTRAN vacuum gauge has an offset drift characteristic of - 2 fA/°C.

  This equals a pressure variation of about 1×10^{-11} Pa as converted to pressure when used in conjunction with a sensor head having a sensitivity factor of 2.3×10^{-2} Pa^{-1}. Pressure may not be measured correctly especially at a low pressure if there is a change in the ambient temperature. In that event, install this gauge in an environment where ambient temperature is stabilized or use the offset adjustment function of this gauge effectively. If the ambient temperature drift is periodic, more effective pressure measurement can be made over a long period by using the automatic offset adjustment mode.

- The surface resistance values of the cable and connector change.

  One of the factors that change the offset current value in a micro current measurement or that increases the noise components is the contamination of the cable and connector. Especially, humidity can be a cause of changing the electrical resistance value on the electrical board and the characteristics of the circuit itself.

  The insulator (PTFE) used for the connector has a very high insulation resistance of 10^{-13} to 10^{-16} Ω. It is also characteristic in that it is highly hydrophobic and that its surface is resistant to formation of water film. If the surface is stained with oil, sweat or other when touched by hand or is contaminated with oil vapor or other and its surface resistivity is impaired noticeably, however, the offset value may change greatly or noise may increase because of inflow of current from outside or outflow of current. So be very careful in handling the cables and connectors as well as to the ambient temperature. (Recommended humidity is not more than 50%.)

- Electrical and mechanical noise will be measurement noise.

  Electrical noise (for example, high-frequency noise) will not only be a noise component in measurement, but also be a cause of trouble of the high sensitivity amplifier. Also static noise can also be a noise component and a cause of trouble of the high sensitivity amplifier. Always ground this gauge against noise and trouble.

  If the ion collector cable is subjected to an impact or vibration by mechanical noise (vibration), a current will be generated by friction of the insulator, causing noise and offset drift. In such a case, move the cable away from the source of vibration or fix it so that it is not subject to the influence of mechanical noise.

For more information, refer to the KEITHLEY′s ″High Sensitivity Measurement Handbook″ and other literatures.

13.2. Types of Measurable Gas and Specific Sensitivity

As explained in 13.1.1, this vacuum gauge has been adjusted so that the correct pressure is indicated for nitrogen gas.

Therefore, if a gas atmosphere other than nitrogen gas is measured, the measurement value will have an error.

The following is an explanation of the correction of the measurement value output difference by type of gas.

Given that the sensitivity factor for nitrogen gas is k (N_2) and that for a certain type of gas is k (x), let us assume that the vacuum gauge corrected for nitrogen indicates P (N_2) when gas x is admitted into the vacuum layer. Pressure P (x) of the actual gas x at this time is given by the following equation.

$$P(x) = P(N_2)/r$$

where, $r = k(x)/k(N_2)$ (specific sensitivity) ..... (4)

This means that the measurement value output can be corrected by type of gas by dividing the measurement output value of the vacuum gauge by the specific sensitivity factor (relative value for nitrogen gas) of that gas using Eq. (4).

(Example) When argon gas is measured by an ion gauge
The true pressure P [Pa] will be as follows when the measurement value output P (Ar) is 5×10^{-6} Pa at this time.

$$P = \frac{P(Ar)}{\text{Specific sensitivity factor for Ar}}$$

$$= \frac{5 \times 10^{-6}}{1.34}$$

$$= 3.7 \times 10^{-6} \text{ [Pa]}$$

Table 13-1 Specific Sensitivity of Ion Gauge for Each Gas with Respect to Nitrogen and Relative Ionization Cross-Sectional Area

4	2	He	0.221*	0.13±0.02
20	10	Ne	0.358*	0.25±0.05
40	18	Ar	1.34*	1.23±0.07
84	36	Kr	1.88*	1.84±0.06
132	54	Xe	2.50*	2.64±0.08
2	2	H_2	0.491*	0.38±0.04
4	2	D_2	0.40	0.41
15	10	NH_3	0.645*	1.23
18	10	H_2O	1.25±0.44	1.03
28	14	CO	0.95*	1.06±0.03
28	14	N_2	1.00	1.00
30	15	NO	1.17±0.11	1.24
32	16	O_2	0.879*	0.96±0.07
		Air	0.97±0.1	0.75
34	18	H_2S	2.20±0.02	2.03±0.20
36	18	HC1	1.65±0.21	1.61±0.02
44	22	CO_2	1.35*	1.39±0.08
44	22	N_2O	1.66±0.27	1.30±0.17
146	70	SF_6	2.50	2.41
200	80	Hg	3.30±1.04	2.07±0.04
16	10	CH_4	1.58*	1.63±0.30
30	18	C_2H_6	2.58*	2.74±0.45
44	26	C_3H_8	3.44*	3.64±0.37
58	34	C_4H_{10}	4.04*	4.57±0.47
72	42	C_5H_{12}		5.60±0.76
86	50	C_6H_{14}	6.60	6.77±1.44
100	58	C_7H_{16}	7.60	7.72
114	62	C_8H_{18}		8.18
128	70	C_9H_{20}		8.86
26	14	C_2H_2	0.614*	2.06±0.27
28	16	C_2H_4	1.29*	2.27±0.28
42	24	C_3H_6	1.77*	3.25±0.22
56	32	C_4H_8	2.07*	3.82±0.59
70	40	C_5H_{10}		4.81±0.99
84	48	C_6H_{12}	6.37±0.86	6.49
112	64	C_8H_{16}		7.22
126	72	C_9H_{18}		8.72
140	80	$C_{10}H_{20}$		10.37
78	42	C_6H_6	5.18±0.42	5.19±0.50
42	24	Cyclo-C_3H_6		3.75
70	40	Cyclo-C_5H_{10}		6.01
84	48	Cyclo-C_6H_{12}	6.40	6.60±1.59
92	50	C_6H_5-CH_3	6.81	
40	22	CH_2-C-CH_2	1.31*	$CH_2 = C = CH_2$
40	22	CH_3-C-CH	1.41*	CH_3-C≡CH

Srj:
Specific sensitivity of ionization gauge
$Srj(N_2) = 1$ (actual measurement value)

Xj:
Ionization cross-sectional area
$Xj(N_2) = 1$
Calculated value when ionized electron energy is 75 eV

N:
No. of electrons per molecule

Linear relationship holds between Srj and Xj and, when Srj of the gas is unknown, it can be predicted from Xj

Values marked with [*] are cited from Reference 2.

Unfortunately, data on other types of gas are not available at ULVAC.

(1) F. Nakao. Vacuum 25 (1975) 201, 431
(2) K. Nakayama and H. Hojo; J. Appl. Phys. Suppl. 2 Pt. 1. (1974) 113

14. APPENDIX: TEST MODE

This gauge has a test mode that permits confirmation of software version. Turning on the power, with the [△] key and [] key held down simultaneously, displays the software version and starts up this gauge.

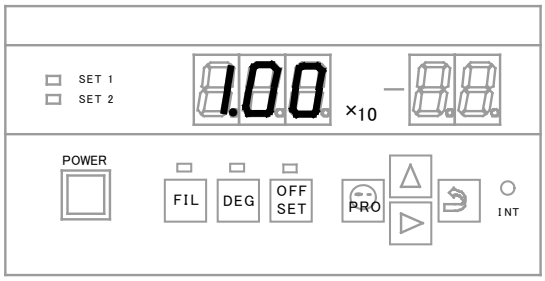

①

Turning on power with both the [△] key and [▷] key held down displays the figures at left.

(Example) [1.00]
⇒ Software version 1.00

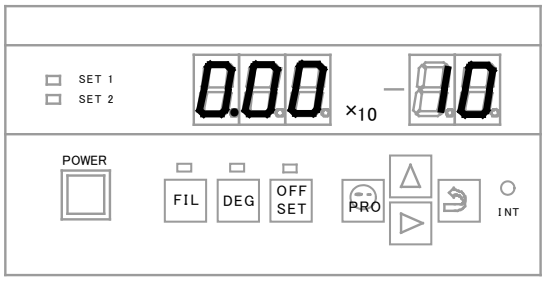

②

After the software version is displayed, the measurement mode MESU-① is set up.

15. WARRANTY

This product was shipped after rigid company inspection. However, in case any failure occurs under ULVAC's responsibility, such as defect in manufacturing and damage during transportation, Buyer shall inform ULVAC, Inc. or the local ULVAC representatives. ULVAC will repair or exchange it at free of charge.

Warrantable Items: Vacuum gauge (controller)

Duration of guarantee: One (1) year after shipping date from ULVAC

Warrantee scope

1) Domestic business in Japan: Product, which has damage, caused by a failure on delivery.
2) Direct export transaction: Product, which has damage, caused by a failure on delivery. The warrantee scope shall confirm to the new INCOTERMS.
3) Products not satisfying meet the standard specifications although the product is used under the normal service conditions such as temperature range and power etc.

Response procedure

1) Domestic business in Japan: ULVAC send a replacement or Buyer return the defective items to ULVAC, Inc. or to the local ULVAC representatives for repair. If field service is required, Buyer shall ask ULVAC, Inc. or the local ULVAC representatives.
2) Direct export transaction: ULVAC send a replacement or Buyer return the defective items to ULVAC, Inc. or to the local ULVAC representatives for repair. Return charge shall be paid by Buyer.

Disclaimer

1) Failure occurred after expiration of warranty period
2) Failure caused by force majeure, such as fire, storm and flood damage, earthquake, lightning strike, war etc
3) Failure occurred due to carelessness handling or faulty usage
4) Products remodeled, disassembled or repaired without ULVAC's acceptance
5) Failure occurred under abnormal environment, such as intense electromagnetic field, radiation, high-temperature, high-humidity, flammable gases, corrosive gases, dust etc.
6) Failure occurred by noise
7) Product deficiency or secondary damnification occurred to Buyer, from law suit to ULVAC by third party for patent infringement.
8) Sensor head being used (expiration of life, measurement error, etc.)
9) Sensor head cable being used (cable burnout due to improper installation, poor contact, etc.)

Others

1) In case, special agreement or memorandum for specifications is made individually, the descriptions are prior to this article "13 Product Warranty".
2) Buyer shall inform ULVAC when this product is exported out of Japan. In the meantime, Buyer shall take necessary procedures according to Foreign Exchange and Foreign Trade Law.
3) As for the question and consultation, Buyer shall check the model and serial number and ask the local representative or ULVAC, Inc.
4) The content of this document is subject to change without notice in future.

16. EC DECLARATION OF CONFORTMITY

ULVAC

EC DECLARATION OF CONFORMITY

We hereby declare that the following our products conform with the essential health and safety requirement of the Low Voltage Directive.

Product	EXTREME-HIGH VACUUM GAUGE
Model	AxTRAN
Manufacturer	ULVAC, Inc. 2500 HAGISONO, CHIGASAKI-SHI, KANAGAWA-KEN, 253-8543 JAPAN
Test standard	EN55011:1998,A1:1999,A2:2002 group 1, class A (Radiated) EN61000-4-2: 1995, A1: 1998, A2: 2001 EN61000-4-3: 2002, A1:2002 EN61000-4-4: 1995, A1:2001 EN61000-4-5: 1995, A1:2001 EN61000-4-6: 1996, A1:2001 EN61000-4-8: 1993, A1:2001 EN61000-4-11: 1994, A1:2001 EN61000-3-2: 2000 EN61000-3-3: 1995, A1:2001
Test lab.	IPS Corporation.

The above products have been evaluated for conformity with low voltage directive by the following European standard. The technical construction file (TCF) for these products are retained at the above manufacture's location and our German office.

EN61010-1, Safety requirements for electrical equipment for measurement, control, and laboratory use.

Signature : Kiyokazu Yanagisawa

Date : 1st/February/2007

Name : KIYOKAZU YANAGISAWA

Title : Director of Components Division

17. China RoHS Declaration

Management Methods for Controlling Pollution by Electronic Information Products

This mark is applied to the electronic information product sold in the People's Republic of China. The figure at the center of the mark is the validity date of environmental protection. This product does not influence the environment, the human body and the property during the period reckoning the manufacturing date as long as the cautions for safe use regarding the products are observed.
*The environmental protection validity date is not the product warranty period.

Table. Making format for names and contents of hazardous substances or elements

Name of parts	Hazardous substances or elements					
	Pb	Hg	Cd	Cr^{6+}	PBB	PBDE
Printed Circuit Board	×	○	○	○	○	○
Chassis	○	○	○	○	○	○
Connector	×	○	○	○	○	○
Controller,Transformer	×	○	○	○	○	○
Label	○	○	○	○	○	○
Gauge Head	○	○	○	○	○	○
Cable	×	○	○	○	○	○

○: indicating that content of the hazardous substance or element in all homogeneous materials of the part does not exceed the requirements for concentration limits specified by SJ/T11363-2006.
×: indicating that content of the hazardous substance or element in, at least one kind of, homogeneous materials of the part exceeds the requirements for concentration limits specified by SJ/T11363-2006. Producer may further explain the technical excuse to the items marked with “X” perspecific conditions here.

18. CERTIFICATE OF DECONTAMINATION

ULVAC

Form: A003S1268-04

ULVAC Components / Certificate of Decontamination

This is a certificate of decontamination for repair and inspection request of ULVAC Components. All material must be certified as decontaminated and this certificate must be submitted to your closest local ULVAC service center or sales office prior to shipment.
Please consult with your closest local ULVAC service center or sales office if our components are used with toxic gases or contaminated with reactive products or substances produced by reaction.

Product model:
Model:
Serial No.:
Application:
Remarks: _____
_____
_____

Contaminant (Check an applicable box.)

☐ I guarantee that above returned item(s) is not contaminated with harmful substances.
☐ Above returned item(s) is contaminated with the following harmful substances.

	Name of contaminant (molecular formula)	Characteristics
1		
2		
3		
4		
5		

To: ULVAC, Inc
Attn: _____

Date: / / (YYYY/MM/DD)

Your company _____
Division _____
Contact _____
Phone _____
Fax _____
E-mail _____

Please pack returned item(s) carefully before shipment. Any accident occurred during transportation to us caused by contaminant is under your responsibility. It is also to be understood that ULVAC may decline to repair returned item(s) depending on the type of contaminant and degree of contamination, and return it to you.

To be filled in by ULVAC Request for MSDS: Yes/No	Received by	
ULVAC job No.		

19. RELATED DRAWINGS

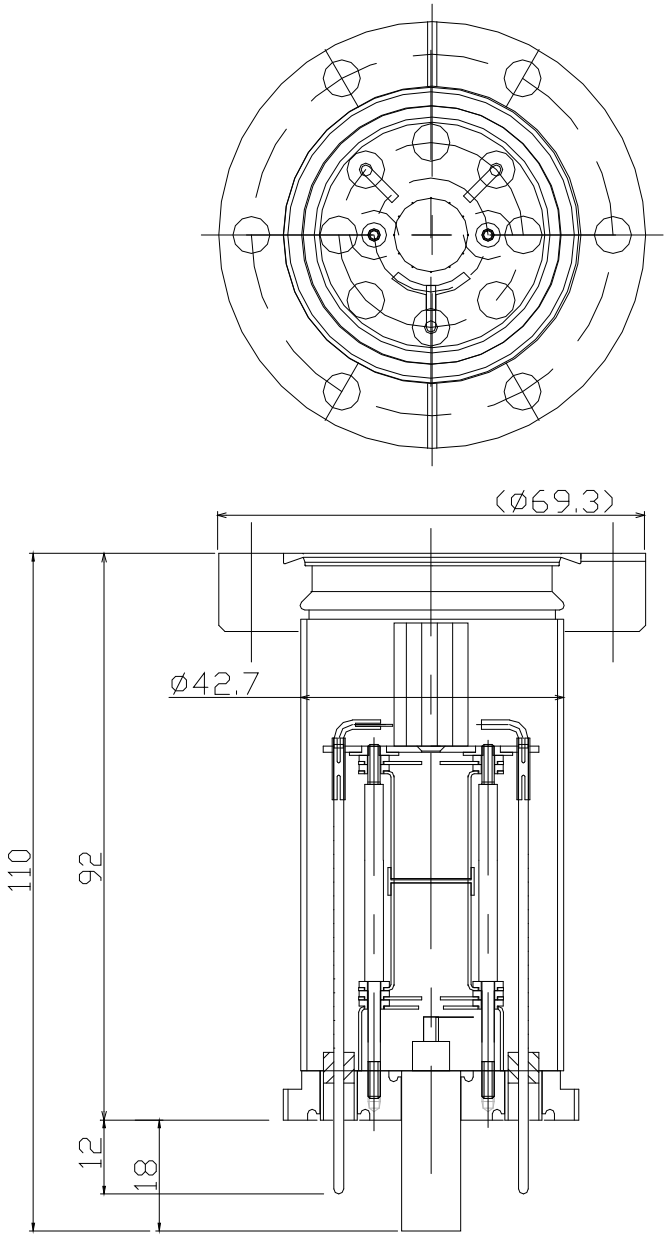

Fig. 19-1 ISX2-compatible sensor heads

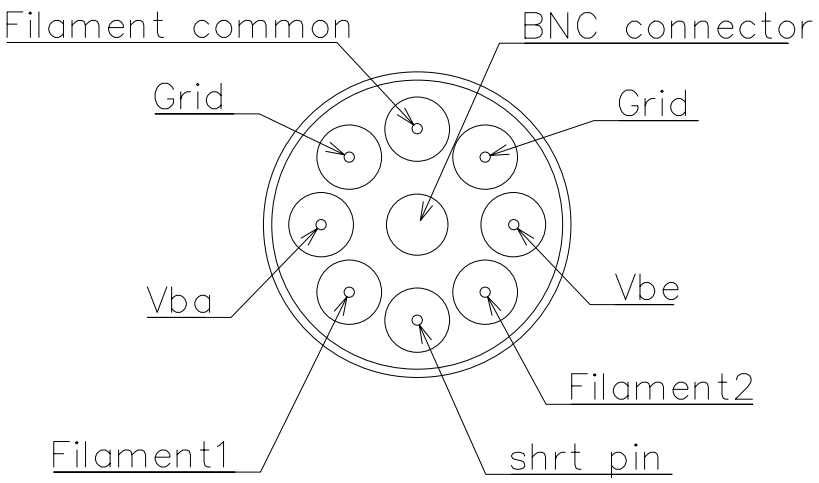

Filament common	:	Orange
Filament 1	:	Yellow
Filament 2	:	Blue
Grid	:	Green
Vbe	:	Red
Vba	:	White

Fig. 19-2 Sensor head electrode location

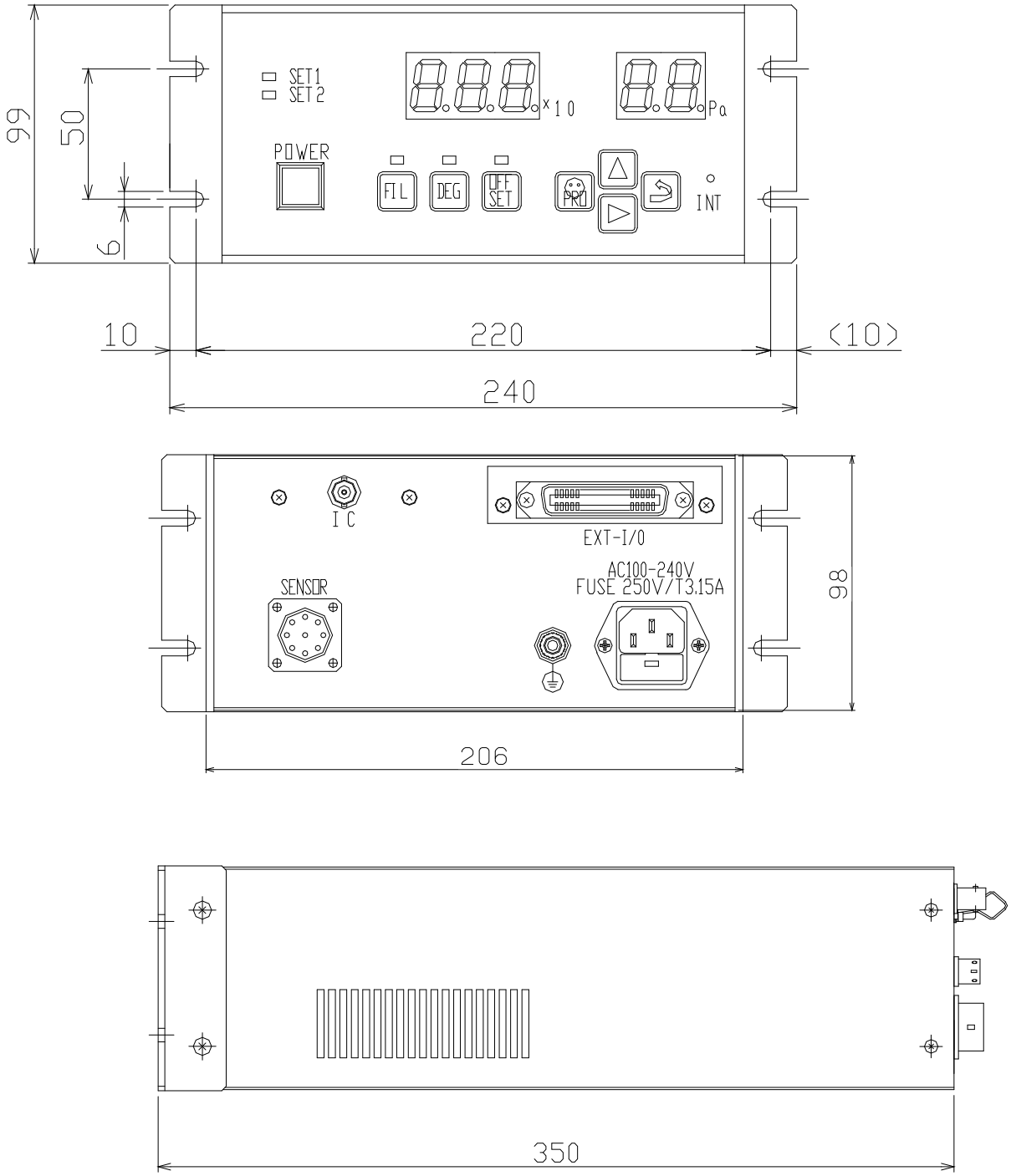

Fig. 19-3 Dimensional drawing

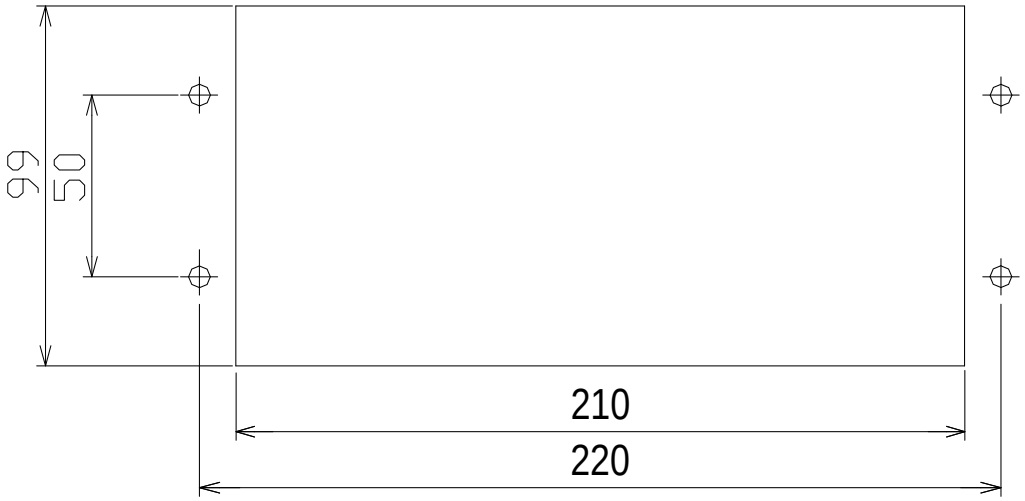

The panel cut dimensions of the gauge are as shown above.
When screw holes are tapped in the panel, the screw size is M5 or M4.
If they are not tapped and fixed with nuts on the rear, use 5mm-dia. or 4mm-dia. screws.

Fig. 19-4 Vacuum gauge mounting panel-cut dimensional drawing

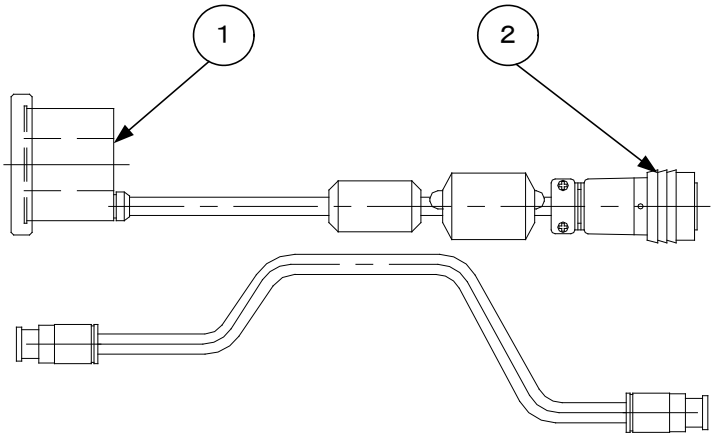

①

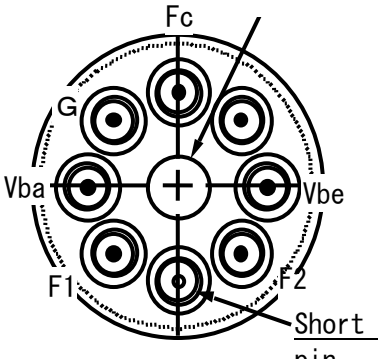

Fc: Filament common : Orange
F1: Filament 1 : Yellow
F2: Filament 2 : Blue
G: Grid : Green
Vbe: : Red
Vba: :White

②

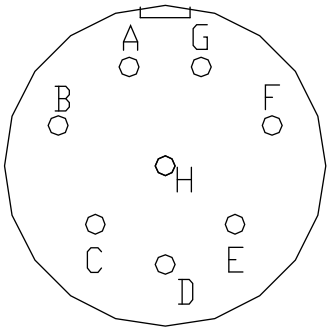

Pin No.	Signal identification	Pin No.	Signal identification
1	FIL1 (yellow)	A	Vbe (red)
2	Vba (white)	B	Vba (white)
3	Vgf (green)	C	Vgf (green)
4	FIL-COM (orange)	D	GND(black)
5	NC	E	FIL1 (yellow)
6	Vbe (red)	F	FIL2 (blue)
7	FIL2 (blue)	G	FIL-COM (orange)

Fig. 19-5 Sensor head cable connection diagram